www.refcomp.com

Version Number: RB-0310-CN

RefComp | 意大利工厂

Svenska Rotor Maskiner AB

地址：意大利·维琴察洛尼戈费尔米路6号

电话：+39 0444 726726

传真：+39 0444 436386

RefComp | 中国工厂

Fujian Snoman Co.,Ltd.

地址：福建省福州闽江口工业区洞江西路

电话：+86（591）2870 1111

传真：+86（591）2870 9222

E-mail：info@snowkey.com

雪人股份保留不预先通知便可自行改变其产品的权利，产品技术参数以订货合同或合同技术附件为准。

RefComp

Semi-hermetic Reciprocating Compressors

SPC系列半封闭活塞压缩机
使用说明书

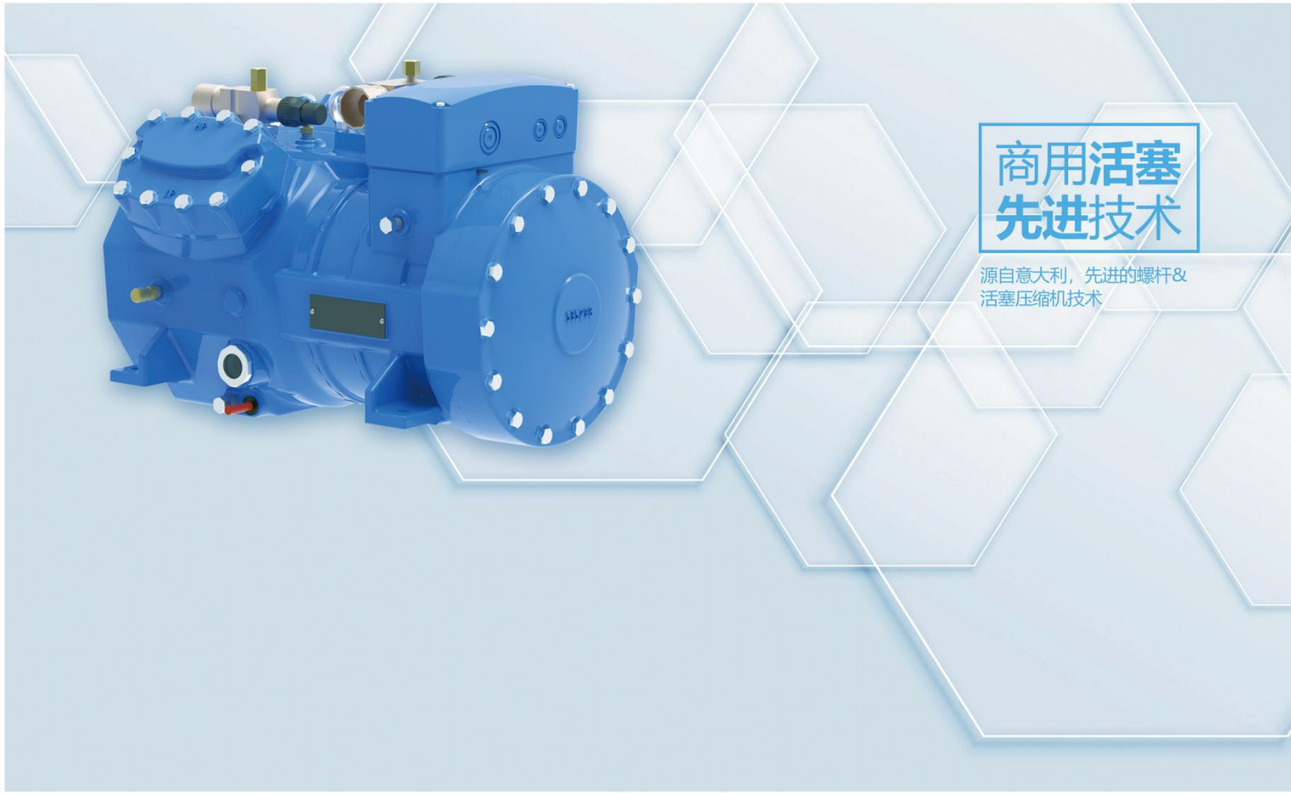

全国统一服务热线
400 - 109 - 6660

Content

1. Foreword..... 1
1.1 Safety guidelines..... 1
1.2 Instructions..... 1
2. Brief introduction..... 2
The compressor can be used for R407C, R134a, R404A, R22 or R507A and other refrigerants..... 2
2.1 Technical parameter..... 2
2.2 Overall dimensions..... 3
3. Application range..... 4
3.1 General..... 4
3.2 Application range..... 4
4.Assembly..... 错误！未定义书签。
4.1 Lifting of compressor..... 5
4.2 Assembly of compressor..... 5
4.3 Pipe connection..... 6
5. Electrical connection..... 8
5.1 Electrical connection instructions..... 8
5.2 Motor..... 8
5.3 Protection module..... 10
6. Commissioning..... 16
6.1 Pressure range..... 16
6.2 Temperature range..... 16
6.3 Operating time..... 16
6.4 Leak detection / vacuum pumping..... 16
6.5 Oil injection..... 17
6.6 Refrigerant injection..... 17
6.7 Compressor start-up..... 17
7.Maintenance..... 18
7.1 Maintenance information..... 18
7.2 Maintenance safety guidelines..... 19
7.3 Solve fault..... 20
7.4 Refrigeration system lubricant..... 23
8. Expanding application of compressor application limit..... 23
8.1 Additional cooling..... 23
8.2 Capacity control..... 24

1. Foreword

1.1 Safety rules

1.1.1 Safety overview

● This series of compressors are the kind of equipment applied in the refrigeration cycle system. Pay high attention to the operator's personal safety and equipment safety for the medium inside the compressor is gas of high temperature and high pressure, and part of the refrigeration medium has certain toxicity and flammability, and the compressor is running under high speed.

● Please follow the installation, commissioning and operation instructions to ensure compressor operating safe and meet the design features and performance. Potential risk will occur if compressor is operated by unprofessional and unqualified worker and unauthorized use and operation.

●The manufacture will not responsible for any injury,damage or manufacturing loss and warranty claims if the installation, commissioning and operating is not according to the instructions.

1.1.2 Personnel requirement

●The installer install, commission and maintain this series of compressor after carefully reading this manual and being trained and qualified to fully understand the equipment.

● Electrical connection and operation of refrigeration system must be operated by the qualified electrical operator.

1.1.3 Safety regulations

The designer and the user shall both follow the related design regulations and rules expect the safety instructions in this manual. Both parties shall follow the local regulations, safety regulations of the customer's company.

1.2 Instructions

1.2.1 Manual content

This manual is as detailed and clear as possible to explain what may be included in the process of design, installation, commissioning, use and maintenance of the user. It contain compressor user guides, overall dimensions, application restrictions, install and run, basic fault judgment and other contents. It is recommended to read this technical manual carefully before designing, installing,operating and maintaining SPC piston compressor to avoid unnecessary damage. This manual must be provided to those responsible for installation and commissioning. Installation and commissioning personnel must follow the instructions, local regulations and relevant rules and regulations in the manual.

1.2.2 Key points of compressor operation

Warning!

Liquid hammer and oil hammer are prohibited during the compressor start-up.

Warning!

Danger! Working area ! Authorized Personnel Only.

Warning !

Only qualified professionals are permitted for the installation, operation and maintenance of compressor and refrigeration system.

Warning!

Only N_2 or CO_2 are permitted for air-tight test of refrigeration cycle system. Prohibit air-tight test with O_2 and acetylene.

Warning!

RefComp piston compressor is only applicable to refrigerants and recommended lubricants approved by Snowman. Prohibit air or other gas compression and other lubricants not recommended by Snowman.

Warning!

Attention! Compressor surface temperature may exceed 100°C or under 0°C during start up. It is possible to cause serious scald or frostbite to personnel, and provide protective measures for personnel contact.

Shut down and cool down the compressor before operating compressor.

Warning!

RefComp compressor is protected by nitrogen charging (0.5-1bar above atmospheric pressure) to prevent air from entering the compressor.

Pay attention to the pressure when starting the compressor, which may damage the eyes. Wear safety goggles when operating the compressor, and don't open the connector before releasing the pressure.

2. Introduction

SPC series semi-hermetic piston compressors have 8 models, the displacement range is 19.3 to 33.1m^3/h at 50Hz. According to different applications, compressors are equipped with different specifications of motors: one is large-size motor (model name is marked with letter "H"), the other is small-size motor (model name is marked with letter "L").

The compressor is applicable for R407C, R134a, R404A, R22 or R507A and other refrigerants.

2.1 Technical parameter

Table 2-1 SPC technical parameter

Model / Parameter	SPC4-19L	SPC4-19H	SPC4-23L	SPC4-23H	SPC4-27L	SPC4-27H	SPC4-33L	SPC4-33H
Compressor nominal power [Hp]/[kW]	5/3.7	6/4.4	5/3.7	6/4.4	6/4.4	8/5.9	8/5.9	10/7.4
Displacement 50/60Hz [m^3/hr]	19.3/23.2	19.3/23.2	23.1/27.7	23.1/27.7	27.3/32.8	27.3/32.8	33.1/39.7	33.1/39.7
Number of cylinders	4	4	4	4	4	4	4	4
Weight [Kg]	78	79	78	79	79	85	84	87
Lubricant injection amount [dm^3]	1.5	1.5	1.5	1.5	1.5	1.5	1.5	1.5
Electrical parameter of crankcase heater	230V-120W-PTC-50/60Hz							
Capacity regulation level	100%，50%							
Electrical parameter of standard motor	400V/3/50Hz-Y(230V/3/50Hz-D)							
Starting current（Y)[A]	54	60	54	60	60	85	85	108
Starting current（D)[A]	94	104	94	104	104	148	148	188
FLA（Y)[A]	12	14	12	14	14	16	16	24
FLA（D)[A]	21	24	21	24	24	28	28	42

2.2 Overall dimensions

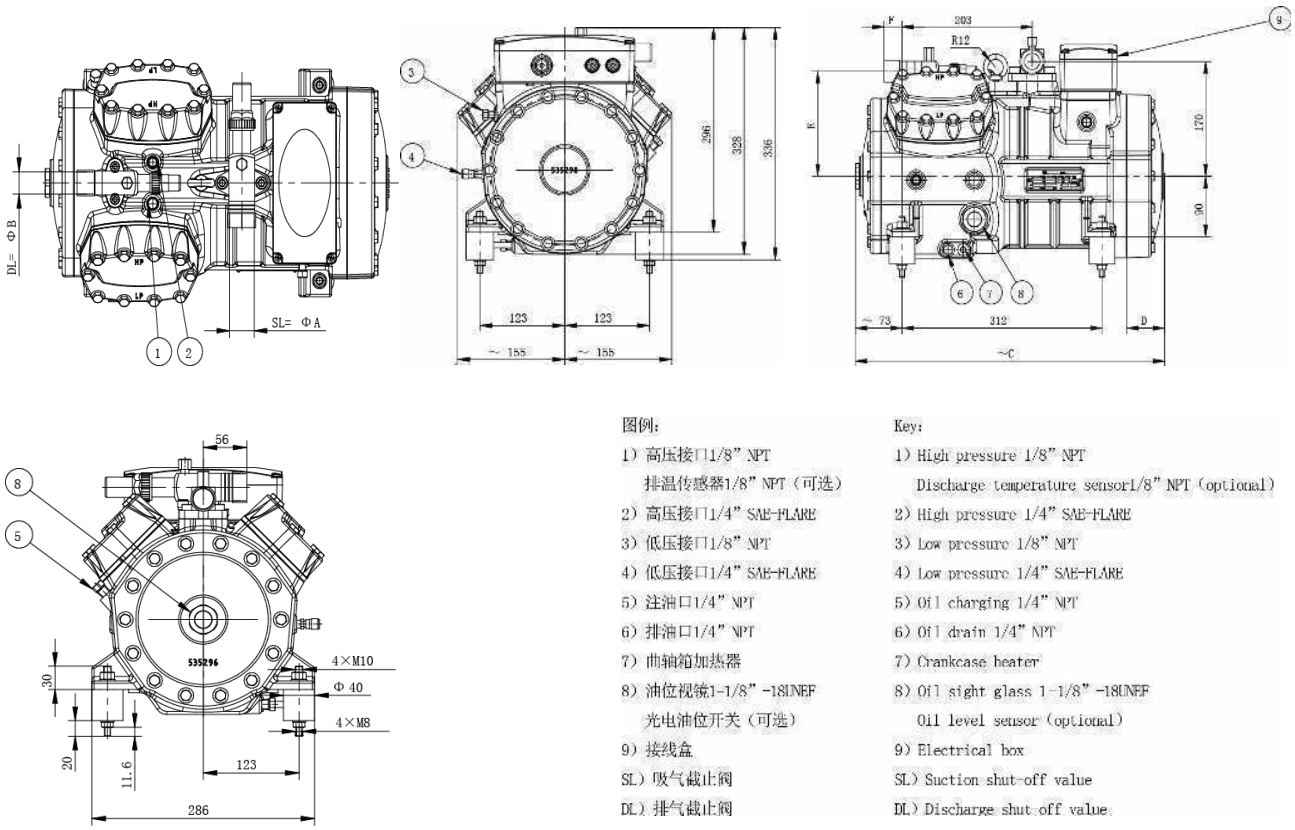

Figure 2-1 SPC series overall dimensions

Table 2-2 SPC series overall dimensions table

Item	Unit	Parameter							
Model	/	**SPC4-19L**	**SPC4-19H**	**SPC4-23L**	**SPC4-23H**	**SPC4-27L**	**SPC4-27H**	**SPC4-33L**	**SPC4-33H**
Dimensions	mm	452.5x310 x336	452.5x310 x336	452.5x310 x336	452.5x310 x336	452.5x310 x336	482x310 x336	482x310 x336	482x310 x336
Size A	mm/ inch	28.85/ 1-1/8″	28.85/ 1-1/8″	28.85/ 1-1/8″	28.85/ 1-1/8″	28.85/ 1-1/8″	28.85/ 1-1/8″	35.5/ 1-3/8″	35.5/ 1-3/8″
Size B	mm/ inch	19.35/ 3/4″	19.35/ 3/4″	22.45/ 7/8″	22.45/ 7/8″	22.45/ 7/8″	22.45/ 7/8″	28.85/ 1-1/8″	28.85/ 1-1/8″
Size C	mm	452.5	452.5	452.5	452.5	452.5	482	482	482
Size D	mm	29	29	29	29	29	58.5	58.5	58.5
Size E	mm	149	149	149	149	149	149	155	155
Size F	mm	10.5	10.5	17	17	17	17	28	28

3. Application range

3.1 General

SPC series compressors are designed with evaporating temperature range from -40℃ to +25℃. The application range is affected by the following factors:

● Refrigerant type; ● Suction temperature; ● Cooling method; ● Motor size

3.2 Application range

Warning!

Prohibit running the compressor out of application range.

R404A-R507A application range

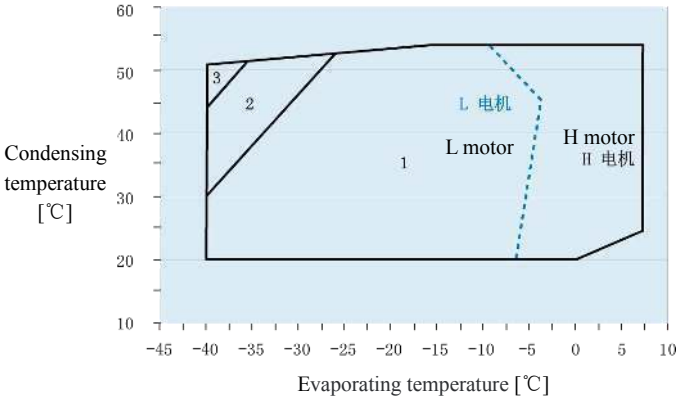

R407C application range

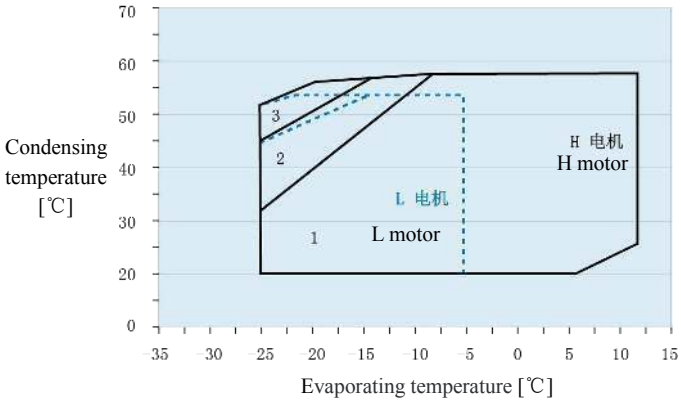

R22 application range

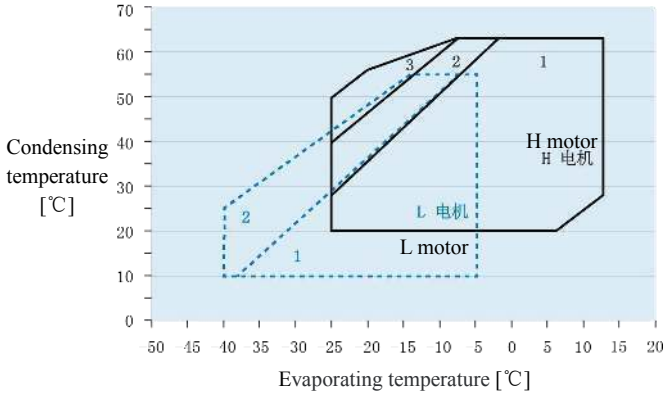

R134a application range

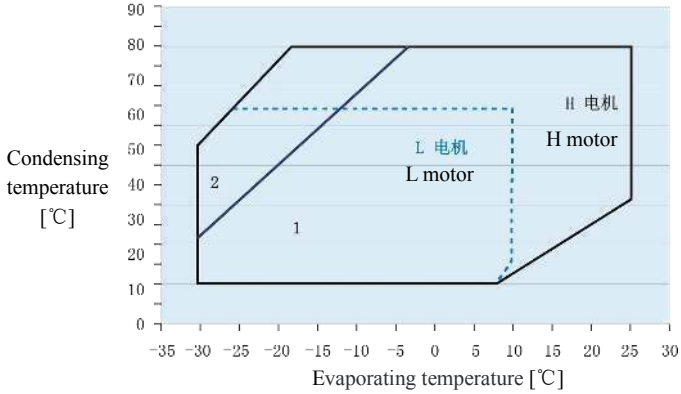

Notes：Application range under full load operation condition

1=Standard application range 2=Additional cooling application range

3=Application range requiring additional cooling +Max.[20℃] suction superheat

4. Installation

4.1 Lifting of compressor

Professional equipment must be applied when lifting the compressor to ensure safe operation. The compressor should be kept horizontally upward when lifting, as shown in Figure 4-1.

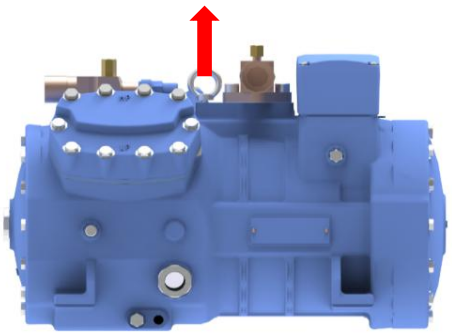

Figure 4-1 Schematic diagram of SPC series lifting

Warning !

Operators must wear proper personal protective equipment.

Warning !

Danger of lifting! No standing under heavy objects.

4.2 Installation of compressor

4.2.1 Installation instructions

The compressor must be installed horizontally, vibration damper components must be applied to reduce the vibration from compressor to the system. If you need to use rigid connection, please consult Snowman first.

Pay attention to the following points for the compressor installation:

● The working environment temperature and storage temperature of the compressor should be kept between -20℃ and +50℃ , the relative humidity should not be more than 90%, and the clean environment without dust and water invasion;

● The installation site of the compressor should avoid the direct invasion of sea water, wind, rain and sunlight, and take preventive measures when necessary;

● The installation site of compressor should avoid the influence of oil fume, heat radiation, humidity and other adverse environment.

If the compressor operates under extreme conditions (such as extremely low ambient temperature or harsh environment), please take reasonable measures after consulting Snowman.

4.2.2 Installation of rubber vibration damper

The parts of the rubber vibration damper are packed in a special nylon bag. Figure 4-2 shows the overall dimensions and installation schematic diagram of the rubber vibration damper.

After installing the compressor into the system with rubber vibration damper, transport the whole system.

When installing the rubber vibration damper, the installation is qualified when the length L of the rubber vibration damper is compressed to 39mm-39.5mm.

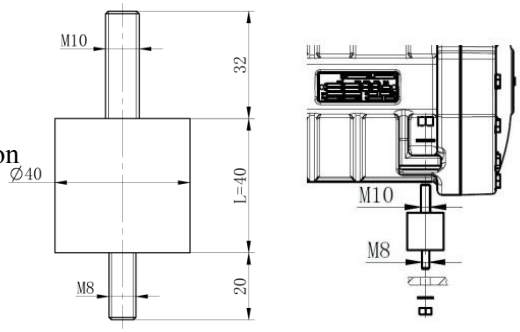

Figure 4-2 Rubber vibration damper of SPC series piston compressor

Caution !

Tighten the vibration damper during operation and transportation, prevent the nut falling due to loosening.

4.3 Pipe connection

Caution !

The suction and discharge stop valve should be kept closed to prevent the air from entering the compressor and reopen when vacuuming.

4.3.1 Pipeline

Only pipes or valves meeting the following requirements can be used:

● Completely clean and dry pipes, don’t use rusty, phosphated surfaces, or waste pipes;

● The pipes should be supplied with sealing plugs at both ends.

According to the design requirements, the blind plate is installed on the stop valve of compressor pipe connector, which must be removed before installation and commissioning.

4.3.2 Pipe connector

The pipeline design is acceptable for metric or inch, so the welded pipe connectors have steps (different diameters), according to the size of the pipe applied (metric or inch), the connectors can be inserted into different depth positions of connector. Cut off the large head of the connector according to the actual requirements.

4.3.3 Stop valve

During the operation, keep the stop valve completely open or closed. The specific installation steps are as follows:

a) Remove protective cap;

b) Loosen the fastening bolt and rotate the stop valve for 1/4;

c) Then open or close the valve shaft;

d) Tighten the stop valve again, tighten the fastening bolts, and install the protective cap.

Warning !

According to the different operation, the stop valve will become very hot or very cold, there is a risk of scalding and frostbite!

Please wear appropriate protective equipment during operation!

Warning !

In order to prevent the stop valve from overheating, the valve body must be cooled during and after welding!

When rotating / installing stop valve:

Warning !

Please tighten diagonally, tighten to the specified torque at least in two steps, otherwise there is a risk of the compressor damage.

Carry out air tightness test before commissioning.

4.3.4 Suction filter

The suction filter mesh of the compressor is built-in, as shown in Figure 4-3. The suction filter mesh of SPC series compressor is built-in under the suction stop valve. When cleaning the suction filter mesh, the suction stop valve needs to be removed.

It is strongly recommended to use the external suction filter. When cleaning the system pipeline, the filter cartridge of the external suction filter can be removed. When the motor is corroded by acid, an acid resistant filter cartridge can be installed in the filter.

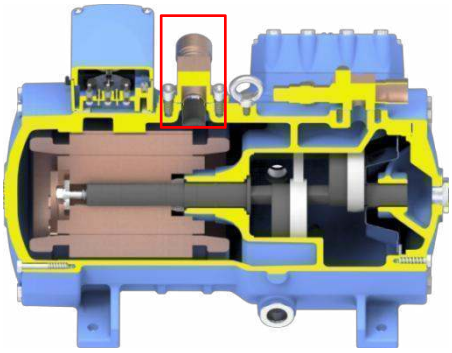

Figure 4-3 SPC series suction filter position

4.3.5 Suction pipeline

The suction line of the parallel unit must be designed so that the lubricant and liquid refrigerant will not flow into the compressor even when the compressor is shut down.

It is recommended to design an oil return connector between each suction pipe and the header pipe. As for the selection of suction pipe diameter, the flow speed of refrigerant should be higher than 4m/s (horizontal section) or

7m/s (vertical section) at the minimum load.

4.3.6 Gas-liquid separator

It is recommended to use gas-liquid separator on the suction pipeline.

4.3.7 Discharge pipeline

The cross-sectional area of the discharge header pipe of the parallel unit shall be at least equal to the sum of the cross-sectional areas of each branch discharge pipe (the part from the compressor discharge stop valve to the discharge header pipe).

Caution !

In order to prevent liquid hammer when the compressor starts, the pipeline from the evaporator outlet to the suction pipe should be upwards.

5. Electrical connection

5.1 Electrical connection instructions

● Please make electrical connection according to the wiring drawing;

● Please select the specifications of the motor contactor, cable and fuse according to the Full-Load Amps (FLA). For the specific value of the FLA, please refer to Chapter 2-1;

● The power supply voltage and frequency must be consistent with the rated voltage on the nameplate. Terminals T1-T2 on the terminal board and terminals 1-2 and B1-B2 of the motor protection module cannot be connected to the power supply or control circuit.

Warning !

Pay attention to safety when operating electrical equipment, and only qualified electricians can operate.

Warning !

No operate under electrified condition.

5.2 Motor

SPC series compressor adopts three-phase four-pole asynchronous motor (50Hz, 1450 r/min or 60Hz, 1750 r/min) and two direct starting modes of star connection or delta connection.

The schematic diagram of direct start motor is shown in Figure 5-1. Among them, 1-4 is one phase winding, 2-5 is one phase winding and 3-6 is one phase winding.

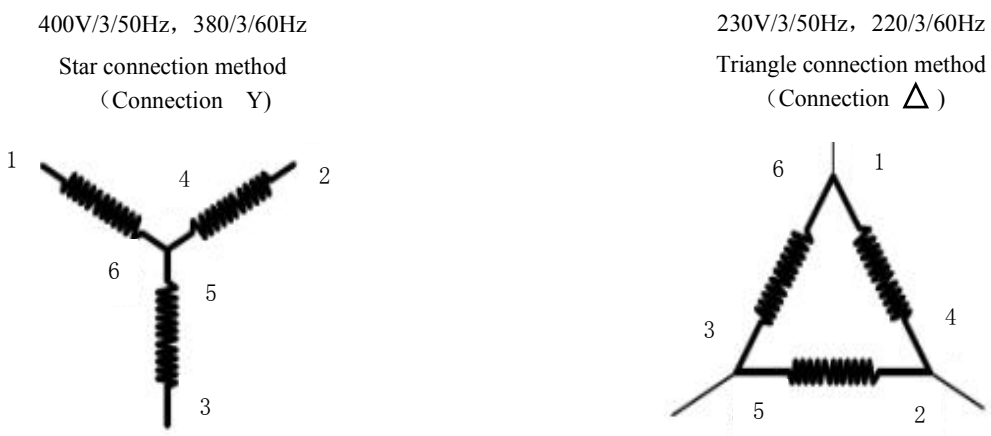

Figure 5-1 Schematic diagram of direct start motor

5.2.1 Motor connection method

There are six terminals of motor coil on the terminal board. Ceramic insulation is used between the terminals. There is a rubber layer outside the ceramic to avoid short circuit caused by condensed water.

Pay attention to check the three-phase electrical connection of the compressor:

- Terminal U-X (or 1-4) is A-phase winding;
- Terminal V-Y (or 2-5) is B-phase winding;
- Terminal W-Z (or 3-6) is C-phase winding.

Caution！

Pay attention to if the rubber layer is damaged, and to the tightening degree of the terminal cable during maintenance.

（1)Star connection

When 400V / 3 / 50Hz or 380V / 3 / 60Hz star connection is adopted. Three pieces of direct start sheet connect X-Y-Z phase as shown in Figure 5-2, U, V, W are the input terminals of M4, client wiring should ensure firm wiring and sufficient contact area.

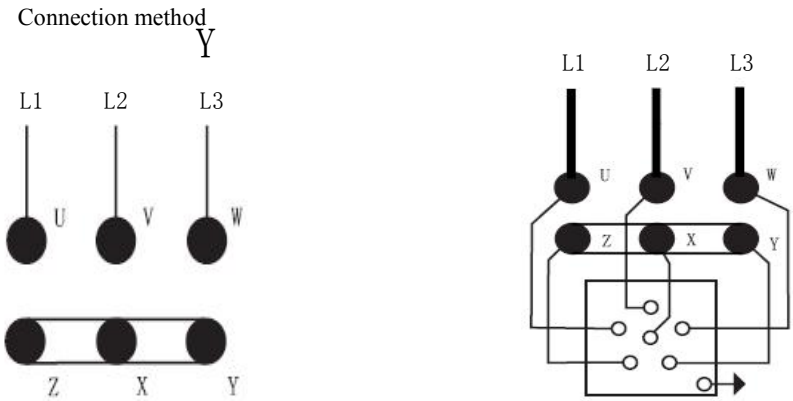

Figure 5-2 Schematic diagram of star connection method

（2)Delta connection method

When 230V / 3 / 50Hz or 220V / 3 / 60Hz delta connection is adopted. Then connect U-Z, V-X, W-Y with three start sheets, as shown in Figure 5-3.

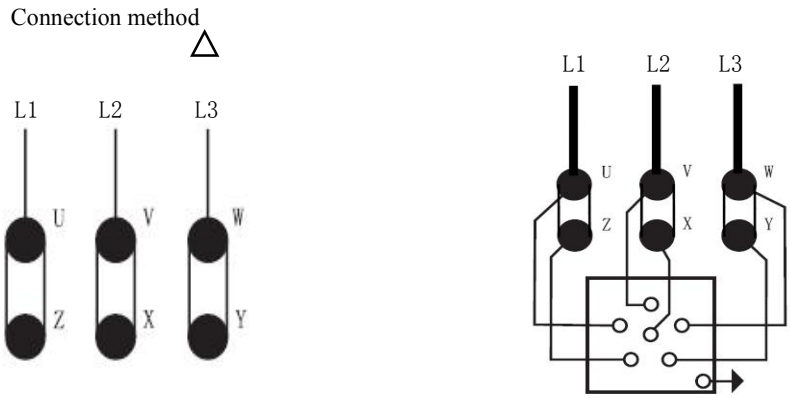

Figure 5-3 Schematic diagram of delta connection method

5.2.2 Check motor insulation

Before the compressor leaves the factory, the insulation test between the compressor and the ground is higher than

300MΩ (1000Vcc megger is used).

The water content and acidity in the compressor will affect the electrical insulation resistance of the compressor, and the insulation resistance of the motor is also related to the temperature of the motor. The minimum insulation resistance of the motor is 2MΩ, otherwise the operation of the compressor motor may be at risk. In this case, check the refrigeration system dry filter and replace the lubricant.

Warning !

Prohibit testing the compressor continuously under high voltage.

Warning !

Prohibit measuring the insulation resistance of the motor when the refrigeration system is in vacuum.

5.3 Protection module

5.3.1 Motor protection module INT69 B2

SPC series compressors are equipped with INT69 B2 protection module as standard, as shown in Figure 5-4, which is used to protect the motor of the compressor. INT69 protection module can also be customized. The discharge temperature sensor can prevent motor burnt caused by excessive discharge temperature.

The electrical parameter table of INT69 B2 protection module and INT69 protection module is shown in Table 5-1.

The schematic diagram of the INT69 B2 protection module electrical wiring is shown in Figure 5-5.

Figure 5-4 INT69 B2 protection module

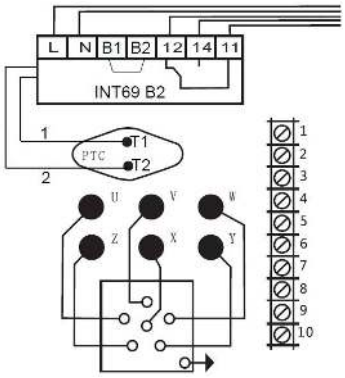

Figure 5-5 Schematic diagram of INT69 B2 protection module electrical wiring

Table 5-1 Electrical parameter table of INT69 B2 protection module and INT69 protection module

Module / Parameter	INT69 B2	INT69
Mechanical life	About one million times conversion	About one million times conversion
IP class (according EN60529)	IP00	With terminal cover：IP20 Without terminal cover：IP00
Enclosure	PA66 reinforced glass fiber	PA6 GF25
Assembly	Screw installation or stuck on 35mm standard rail (according EN 60715)	Assembly base plate

Test circuit: **-Type** **-Sensor quantity** **-R25**	 PTC (according DIN44081/082) 1-9 pcs (series connection) <1800Ω	 PTC (according DIN44081/082) 1-9 pcs (series connection) <1800Ω
Power	AC 50～60Hz 115～230V ±10% 3VA	AC 50～60Hz 240V ±10% 3VA
Working temperature	-30～+70℃	-30～+70℃
Lock reset	Power off >5s	
Output capacity	Max. AC 240V 2.5A C 300 Min. AC/DC >24，>20mA	AC 240V，2.5A，360VA ind.
Weight	About 170g	160g

The INT69 B2 protection module cuts off the compressor's motor power when the resistance of the thermal protection resistance chain exceeds 4.5KΩ, and resets when the resistance is less than 2.75KΩ.

When the module alarms, the INT69 B2 protection mode should be reset manually to ensure that the compressor can be turned on after the fault is confirmed and eliminated. INT69 protection mode adopts automatic reset, when the resistance is decreased, it can reset automatically without manually powering off.

If the compressor has motor overheat protection, the compressor should be turned on after 30 minutes, so that there is enough time to cool the compressor motor, otherwise the compressor motor may burn out.

The protection module is generally installed in the compressor electrical box, and can also be installed in a remote control box, but the cable connecting the thermistor should be equipped with a protective cover, and as far as possible away from the power supply cable to prevent false alarms and interference.

Caution !

After the module alarms, power off INT69 B2 to reset.

Prohibit power supply to terminals 1-2, B1-B2, T1-T2 of the motor protection module.

5.3.2 Motor thermistor

To protect the motor, three PTC thermistors are inserted in the motor near the discharge side of the compressor, and the disconnection temperature is 120 ℃.

When the temperature is lower than 40℃, the resistance value of the thermistor chain does not exceed 1800 Ω. If the temperature of any thermistor exceeds the critical value, the resistance value increases exponentially, and the compressor motor power supply is cut off under the action of the protection module. The resistance of the resistance chain can be measured according to the resistance terminals T1 and T2 in the electrical box.

Caution !

When testing the resistance of the resistance chain, never apply a voltage higher than 3V.

5.3.3 Pressure differential controller

The compressor must be equipped with high pressure and low pressure switches to control the compressor to operate within the allowable range.

- **Pump-down**

If the evaporator or suction pipe of the compressor may be a little hot during the compressor shutdown, then a

pump-down cycle is recommended. Please confirm that there is no repeating start-ups, as the maximum start of pump-down cycle is two times per hour.

● **Heat pump system**

Caution !

Reverse circulation or thermal defrosting systems require appropriate precautions to ensure that compressors are not affected by either of the following conditions:

● The liquid refrigerant flows back to the compressor; ● Too much oil is taken out of the compressor.

To protect the compressor from liquid hammer, it is recommended to install a gas-liquid separator on the suction side. A pressure regulating valve is installed after the compressor to limit the excessive pressure reduction during the heat pump cycle conversion. When the compressor starts for 20 seconds, the compressor should enter the specified application range and ensure that the compressor protection is in effect.

5.3.4 Electronic oil level switch INT278LCA (optional)

Electronic oil level switch INT278LCA, as shown in Figure 5-6, is used to monitor the oil level in the compressor to ensure enough lubrication for compressor working parts. It is more suitable for splash lubrication compressor. Check Table 5-2 for specific parameters and Figure 5-7 for wiring diagram.

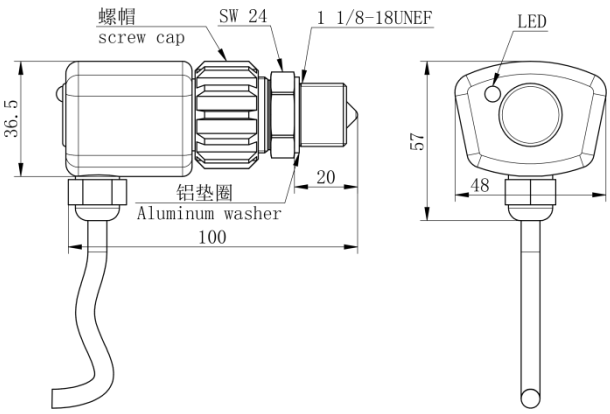

Figure 5-6 Electronic oil level switch INT278LCA

The electronic oil level switch consists of two parts:

● Oil level probe with thread, aluminum washer;

● Control circuit module, reset button, indicator, control connection line.

Caution !

Please equipped the SPC series piston compressor with electronic oil level switch to ensure the compressor normal working and extend compressor service life .

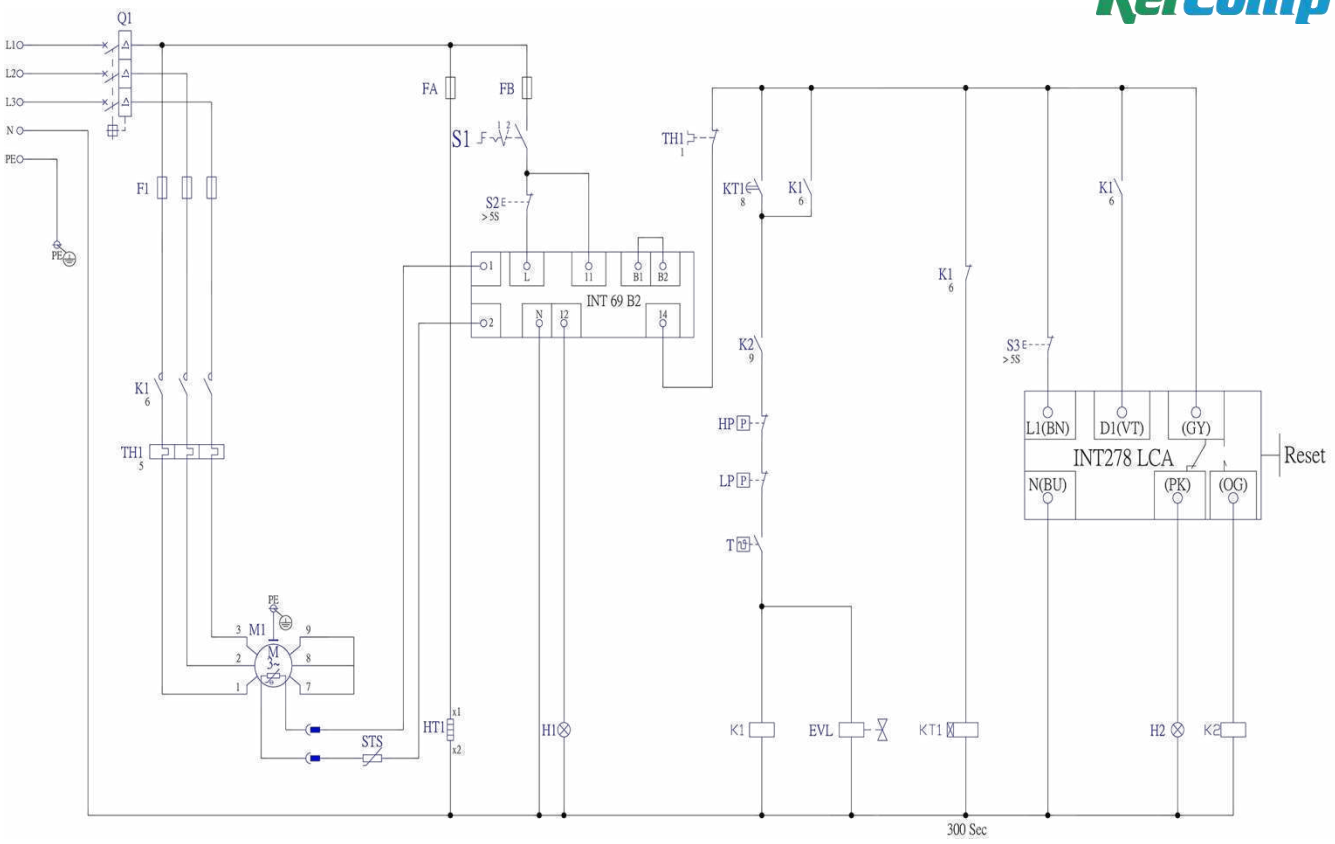

Figure 5-7 Wiring diagram of electronic oil level switch

Note: Instruction of wiring note

Q1: Main switch F1: Compressor fuse FA: Heater fuse FB: Control circuit fuse K1: Motor contactor K2: Oil pressure differential controller intermediate relay H2: Oil level alarm THI: Thermal overload relay M1: Compressor motor STS: Discharge temperature sensor HT1: Electric heater S1: Control switch EVL: Liquid supply solenoid valve S2: Fault reset switch S3: Fault reset switch

HP: High pressure switch LP: Low pressure switch T: Thermostat H1: Overload indicator KT1: Operating time interval of time relay

Note: Color schematic diagram of INT278LCA module wiring

No.	Terminal block	Color description	Function declaration	Note
1	L1(BN)	Brown	Power live wire	
2	N(BU)	Blue	Power neutral wire	
3	D1(VT)	Purple	After switching on, start oil level protection	
4	(GY)	Gray	Signal common terminal	
5	(PK)	Pink	When alarm, GY and PK are connected	In normal state, after 3 seconds of power on, GY and PK are disconnected, GY and OG are connected
6	(OG)	Orange	When alarm, GY and OG are disconnected	

Table 5-2 Electronic oil level switch parameter table

Electrical part	Mechanical part

Power	AC 50/60Hz 230V±10%	**Working temperature**	-30...+60℃
Activation point voltage (D1)	AC 50/60Hz 115V -15...+10%	**Max. temperature of glass cone**	+100℃
Working temperature	-30...+60℃	**Max. working pressure**	42 bar
Output capacity	AC 240V 2.5A C300	**Housing material**	1.0715 steel, nickel plating
Delays: **-Power connection output delay** **-Activation point D1 connection output delay** **-Liquid level protection output delay** **-Fault alarm output delay** **-Power reset shut down time**	3s ±1s 5s ±2s 90s ±5s (block) 5s ±2s (block) ＞3s	**Connection thread**	1-1/8″-18 UNEF
		Weight	About 75g
		Mechanical service life	About 100000 times on-off
		Housing material	A3XZG5
		IP class (according EN60529)	IP54 (Indoor status)
		Installation	Connect thread M24x1
		Connection cable	6xAWG-18 (0.75mm^2) cable, L=1m
		Weight	About 80g
		Certification	HL File No.E222056

5.3.5 Crankcase heater

The purpose of the crankcase heater is to ensure the good lubricity of the lubricant. The crankcase heater is installed in a separate sleeve at the bottom of the compressor. As shown in Figure 5-8.

This type of crankcase heater is separated from the crankcase, so it is unnecessary to change the oil when replacing the crankcase heater.

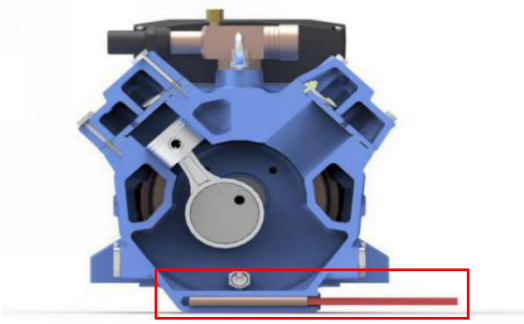

Figure 5-8 Crankcase heater position

The main technical data of the crankcase heater is shown in Table 5-3, and the overall dimension diagram is shown in Figure 5-9.

Table 5-3 Crankcase heater electrical parameter

Compressor model	Crankcase heater code	Rated power (W)	Power (V-Hz)	IP class
SPC	303951(760539)	120(1)	230-50/60(2)	IP54
	303952(760540)	120(1)	110-50/60	IP54

Note: (1) PTC type heater (2) Standard voltage

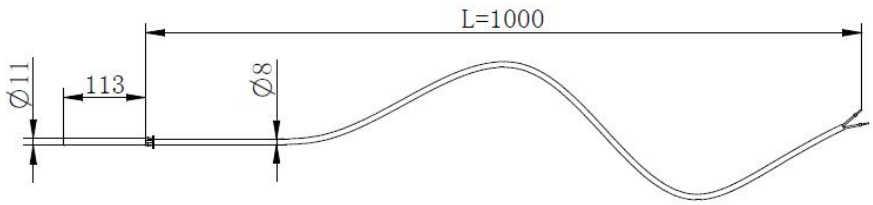

Figure 5-9 Overall dimension drawing of SPC series crankcase heater

Crankcase heater is applied during compressor shutdown, start the crankcase heater during the following

situations:

● Compressor crankcase temperature lower than 10 °C;

● The temperature difference between the oil temperature and the standard evaporating temperature is less than 10-15K;

● Large refrigerant injection;

● The refrigerant condenses in the compressor (the oil temperature should be the highest temperature of the refrigeration system during the shutdown period).

Warning!

Start the crankcase heater 24 hours before the first start after compressor long time shutdown.

Before starting the compressor, the lubricant temperature shall be 15 °C higher than the ambient temperature or other parts of the refrigeration system (such as the terminal box).check if crankcase heater working normally during refrigeration system maintenance.

The crankcase heater installation is shown in Table 5-4.

Table 5-4 Schematic diagram of crankcase heater assembly and disassembly

Crankcase heater assembly procedures	
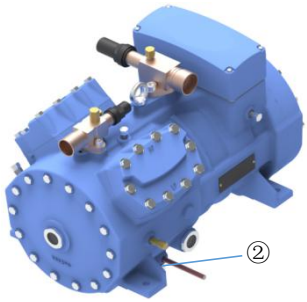 Step 1: Insert the crankcase heater②	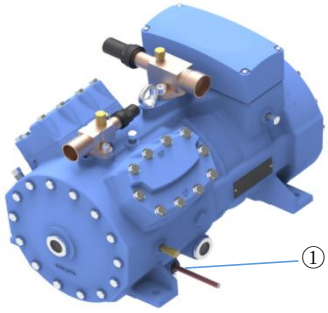 Step 2:Install the plastic fixing plug①
Crankcase heater disassembly procedures	
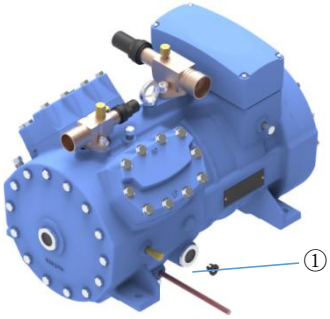 Step 1: Disassemble the plastic fixing plug①	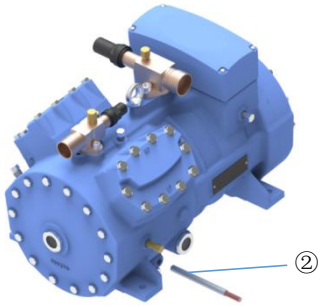 Step 2: Disassemble the crankcase heater②

Caution !

Attention! Ground protection of electrical circuit.

6. Commissioning

6.1 Pressure range

The allowable values of air tightness test and working pressure are as follows:

	Air tightness test	Working pressure
High pressure	30bar	30bar
Low pressure	19bar	19bar

The maximum balance pressure when the compressor starts is 13 bar.

To prevent motor overload, the working pressure must be controlled within the application range. It is recommended to use M.O.P (maximum operating pressure) expansion valve or pressure regulating valve when necessary.

Warning !

Prohibit running the compressor at a pressure higher than the pressure value on the compressor nameplate.

6.2 Temperature range

Discharge temperature: The maximum value is 140°C and the minimum value is 30K above the condensing temperature.

Suction temperature: For R22, R407C, R134a, R404A and R507A, the minimum superheat is 8K.

Oil temperature: During normal operation, the oil temperature should not exceed 80°C, and the temperature difference between oil temperature and discharge temperature is about 40K.

6.3 Operating time

It is recommended to operate the compressor according to the following operating time.

Start-up time:	No more than 6 times within 1 hour
Min. time between two starts:	10mins
Min. operating time:	3mins

6.4 Leakage detection / vacuuming

Perform the leaking test on the refrigeration system with dry nitrogen; if the circuit is tested with dry air, the compressor must be excluded. Vacuum the entire refrigeration system, including the compressor suction side and

discharge side.

During vacuum pumping, the oil heater needs to be powered on. It is required to vacuum at least 1.5mbar (with vacuum pump with stop valve). Repeat this operation several times if necessary.

Warning!

Prohibit starting the compressor under vacuuming.

6.5 Oil injection

The injection procedures of lubricant are as follows:

● Connect the oil reservoir with the corresponding oil injection port of the compressor;

● Control the lubricant injection amount within the range of the horizontal position shown in Figure 6-1;

● Close the lubricant injection port.

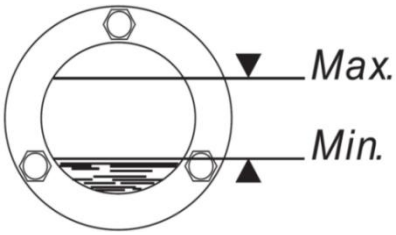

Figure 6-1 Oil level range

Caution!

Unless specifically requested, all compressors have been injected with lubricant. The type of lubricant is indicated on the nameplate of the compressor. If you replace it with other lubricant, please consult Snowman if it is feasible. If the lubricant is required to be delivered separately, inject the lubricant into the compressor after the compressor is vacuumed.

6.6 Refrigerant injection

Inject the liquid refrigerant into the condenser or directly into the refrigerant receiver. Complete the refrigerant injection during compressor operation, when inject the liquid refrigerant, the discharge temperature is at least 30K higher than the condensing temperature to avoid liquid backflow, and control the injection speed a little bit to avoid liquid hammer. Insufficient refrigerant injection will result in low suction pressure or excessive degree of superheat. Please use the RefComp selection software to calculate the correct discharge temperature value for reference.

Warning!

Prohibit charging liquid refrigerant from low pressure port of compressor.

Warning!

Only refrigerants approved by Refcomp can be used for RefComp piston compressor, prohibit air or any other gas compression.

6.7 The start-up of compressor

The compressor start-up procedures are as follow:

a) Release the Nitrogen inside the compressor, connect the compressor with refrigeration circuit to ensure there is no air inside the suction and discharge stop valve. Compressor internal (such as lubricant) and air shall not contact more than 30 minutes;

b) The crankcase heater must be turned on 24 hours before the compressor is turned on, and the oil temperature must be at least 15°C above the ambient temperature;

c) Refer to the requirements of wiring diagram in Chapter 5 "Electrical connection" of this manual for electrical connection;

d) Perform the following preliminary inspections:

- Correctly set the start time timer;
- Confirm the oil level;
- Check if the settings and functions of safety and protection equipment are normal;
- Check if the high-pressure and low-pressure pressure protection switches are normal;
- Confirm whether the compressor has been vacuumized;
- Confirm that there is no leakage in the system.

e) Inject the minimum amount of refrigerant into the condenser;

f) Open the suction and discharge shut-off valves and start the compressor;

g) Complete the refrigerant injection of the whole system;

h) Ensure the discharge temperature is at least 30K higher than condensing temperature (Check RefComp selection software for the accurate value);

i) Check if the pressure switch is working properly;

j) Check the working parameters, such as evaporating pressure, condensing pressure, suction and discharge temperature etc.

Warning!
The compressor shall not be started and operated without connecting the refrigeration cycle.

Warning!
Prohibit starting the compressor when the terminal box cover is not properly installed and fixed.

7.Maintenance

Caution!
During the commissioning of compressor and unit, please pay attention to the dirt and blockage of dry filter, suction filter and oil filter. Please replace or clean them in time!

7.1 Maintenance information

It is recommended to use the operation recorder to record date, time, capacity level, suction pressure, suction temperature, discharge pressure, discharge temperature, oil pressure, oil temperature, voltage, current (overall current of compressor), oil level, oil acidity.

For the frequency of detection, please refer to the table below:

Checklist	Weekly	Monthly	Every 2 months	Annually
Read and record refrigerant pressure	√			
Read and record the supply voltage of the motor	√			
Read and record the supply current of the motor	√			
Check the compressor oil	√			

Check the refrigerant charge amount by the lubricant flash	√			
Check if the suction superheat degree is properly		√		
Check all safety protection device		√		
Check all contactors and electrical plugs		√		
Check the humidity indicator of refrigerant		√		
Check whether the solenoid valve work normally		√		
Check the lubricant status inside the compressor			√	
Check the condition of the capillaries (including unit and the heat exchanger)				√

Comparing the running data, especially the discharge temperature, you may find some hidden failures or problems that will occur in the future from the date variation.

Some hidden failures are reflected from cleanliness and color changes. For example, oil strains on some parts tends to adhere to dust. If you don't clean for a long time, it will seriously affect the compressor operation. Sometimes they can be judged from the color changes of the parts: such as some parts work in high temperature for long time, the color will change.

For motor, in addition to confirming the insulation and current conditions, it is also necessary to:

- Control the environment and temperature of the cable from the contactor to the motor terminal, and pay attention to avoid high temperature and humidity;
- Check whether the cable is tightly fixed with the terminal.

7.2 Maintenance safety guidelines

Warning !

Don't use compressed air to clean electrical equipment, so as to prevent the damage of electrical components.

Warning !

All repair and maintenance related to mechanical components must be carried out in case of power failure.

Warning !

Operations like maintenance, inspection and adjustment must be performed by qualified personnel who must wear reasonable personal protective equipment (safety shoes, overalls, gloves, goggles and mask).

Warning !

If the circuit breaker in the circuit continues to operate (motor circuit break, main circuit break or other break) , please contact a qualified electrician to solve the problem.

If the fuse burns or circuit opens , it is recommended to find out the cause of the problem before deciding the countermeasures. In most cases, blind replacement or simple repair will not solve the problem.

Warning !

When resetting the trip protection, the compressor must be stopped and in a power-off state.

Operation	Protective clothing	Safety shoes	Gloves	Goggles	Hearing protector	Mask	Helmet
Transportation	★	★	★	△	◆	△	◆
Handling	★	★	★	△	◆	△	◆
Unpacking	★	★	★	△	◆	△	△
Assembly	★	★	★	△	◆	△	△
General use	★	★	★	△	◆	△	△
Commissioning	★	★	★	△	◆	△	△
Cleanness	★	★	★	★	◆	△	△
Maintenance	★	★	★	△	◆	△	△
Disassembly	★	★	★	★	◆	△	◆
Scrap	★	★	★	△	◆	△	◆

★: Necessary ◆: Operate according to the actual situation △: Unnecessary

7.3 Trouble-shooting

Failures	Possible causes	Solutions
1. Compressor can't start	a) The start switch is not open;	a) Open the start switch;
	b) Fuse burning;	b) Check the circuit to confirm if there is short circuit or proper grounding, and check if the motor is overloaded. Replace the fuse after confirming the cause;
	c) Superheat protection;	c) Refer item (12);
	d) Contactor failure;	d) Repair or replace;
	e) Expansion valve not open;	e) Open the expansion valve;
	f) The motor is faulty;	f) Check the connection or insulation of the terminals (refer Chapter 5.2.2), check if there is any burnt insulation material;
	g) The terminals are loose;	g) Check all electrical connections and tighten the contact parts;
	h) Compressor safety protection;	h) Confirm and eliminate any safety protection action, restart

Failures	Possible causes	Solutions
		the motor;
	i) The temperature set of the thermostat is too high.	i) If necessary, lower the setting temperature of the thermostat and set a temperature 15℃ higher than the ambient temperature.
2. **Compressor noise is too loud**	a) Unreasonable pipeline supports design;	a) Change, reduce or increase the fixed points of pipeline;
	b) Insufficient gap;	b) Maintenance and replacement of unmatched accessories;
	c) Compressor leaking;	c) Check for leak;
	d) The motor stator is not fixed properly;	d) Check and fix;
	e) Sound insulation, improper vibration.	e) Check the fixing condition of compressor feet (refer Chapter 4.2.2)
3. Compressor discharge pressure is too high	a) The discharge valve is partially closed;	a) Open the discharge valve;
	b) The refrigerant charge is too large;	b) Discharge excess refrigerant;
	c) The capillary nozzle is dirty and blocked;	c) Clean the garbage at the nozzle of the capillary;
	d) The refrigerant circuit is mixed with non-condensable gas;	d) Discharge the non-condensable gas;
	e) Capillary too small or malfunctioning.	e) Adjust the condensing flow or adjust the throttle.
4. Compressor discharge pressure is insufficient	a) The condensing temperature is set incorrectly;	a) Check the electrical control settings of the condenser;
	b) The suction valve is partially closed;	b) Fully open the suction valve;
	c) Insufficient refrigerant;	c) Leak detection and refrigerant supplement;
	d) The suction pressure is unreasonable;	d) Refer to item (6);
	e) No compressor upload;	e) Check CR or SU components, refer to item (8);
	f) Too big condenser;	f) Review the system design parameters;
	g) Sealing ring or discharge valve failure.	g) Repair compressor.
5. **Compressor suction pressure is too high**	a) The compressor load is too large;	a) Decrease compressor load, or increase the refrigeration capacity of refrigeration system;
	b) Too much liquid refrigerant;	b) Check the ball valve, adjust the superheat, and check the size of the expansion valve;
	c) No compressor upload;	c) Check CR or SU components, refer to item (8);
	d) Unreasonable compressor selection;	d) Review the design parameters;
	e) The evaporator is not large enough.	e) Review the design parameters.
6. **Compressor suction pressure is insufficient**	a) Refrigerant leakage;	a) Leak detection and refrigerant supplement;
	b) The evaporator is dirty or ice-block;	b) Clean the evaporator or defrost;
	c) The dry filter on the liquid circuit is blocked;	c) Replace the filter cartridge;
	d) The suction circuit filter or compressor suction filter is blocked;	d) Clean the filter;
	e) Expansion valve failure;	e) Check or reset the expansion valve to a suitable superheat degree, repair or replace the expansion valve;
	f) The condensing temperature is too low;	f) Check the condensing temperature control equipment;
	g) Compressor internal blow-by;	g) Refer to item (7)

Failures	Possible causes	Solutions
	h) The water pump or evaporator fan is not working.	h) Check and start.
7. **Compressor not working at partial load**	a) Capacity regulation components failure;	a) Replace;
	b) Capacity regulation components internal blocked.	b) Replace or clean impurities.
8. **Compressor can't load**	a) Capacity regulation components failure.	a) Replace.
9. **Compressor loading or unloading is too fast**	a) Excessive expansion valve causes excessive suction pressure.	a) Change a proper expansion valve
10. Compressor lack of lubricant	a) Lubricant stays at the system pipelines or evaporator;	a) Confirm the refrigerant flow speed;
	b) Oil leakage of CR components;	b) Replace the damage parts of the CR components;
	c) Too slow flow rate at the suction pipeline;	c) Check the suction pipe size;
	d) Leakage at piston oil scraper ring.	d) Repair the compressor.
11. The current is too large and the contactor is in open circuit	a) Condensing temperature too high;	a) Refer to item (3);
	b) Open circuit caused by fuse single phase operation;	b) Find out the cause of the open circuit of the contactor, and then repair or replace the fuse;
	c) The voltage is too low at full load;	c) Check the line voltage, and confirm whether the voltage drop value of each phase power supply voltage is too large;
	d) Loose contact of power supply cable;	d) Check and tighten the terminal;
	e) Contactor failure;	e) Repair or replace the contactor;
	f) The overload contactor is faulty;	f) Refer to the compressor nameplate and select an appropriate contactor;
	g) The contactor temperature is too high due to overload current;	g) Strengthened the ventilation of the electrical cabinet of the relay;
	h) The power supply cable is damaged or the wire hits the ground;	h) Repair or rewire;
	i) The voltage of each phase is unstable, leading to lack of phase or single-phase operation;	i) Check the power supply voltage, and it is not allowed to start until the fault is resolved;
	j) The motor wiring mode (star-delta or part-winding method) is wrong;	j) Repair / replace contactor or timer;
	k) The wire hits the ground, causing trip protection;	k) Repairing or rewiring the motor;
	l) The compressor parts are stuck.	l) Repair the compressor.
12. **Compressor starts and stops frequently**	a) The temperature values set by the thermostat are too close to each other;	a) Check the temperature setting of the thermostat and adjust it appropriately;
	b) The solenoid valve fails;	b) Replace solenoid valve;
	c) Too much refrigerant injection;	c) Release excess refrigerant;

Failures	Possible causes	Solutions
	d) Lack of refrigerant;	d) Check the system for leakage, repair and fill refrigerant;
	e) The relevant control valves of refrigerant flow in evaporator and condenser fails;	e) Check the temperature setting of the control valve. Clean, repair or replace the control valve if necessary.

7.4 Lubricant of refrigeration system

If the system is clean, the entire refrigeration system and lubricant will not be contaminated. When the lubricant circulation and the motor insulation are in a very good condition, then the compressor can work for a long time and stay reliable.

The system working status is depend on the following aspects:

- Reasonable suction superheat degree;
- Work within application range;
- Reasonable refrigerant charge of the system;
- The compressor running smoothly (the compressor does not start and stop for a short time, the oil return is normal, and the compressor does not start up frequently). In the actual operation, any leakage and wrong flow of the refrigerant must be avoided, and at the same time, prohibit compressor oil shortage.

Caution !

Please keep the machine clean and dry to avoid air entering the refrigeration system.

Use the high quality lubricant recommended by Snowman, and ensure that its viscosity meets the requirements to avoid oil pollution.

Caution !

Avoid welding, chlorinated compounds and other pollution factors, directly or indirectly causing the formation of copper salt.

When using refrigerant R22, avoid paper or cellulose inside the oil filter.

8. The extended application of compressor application limit

8.1 Additional cooling

8.1.1 Allowable discharge temperature

The maximum allowable discharge temperature of the compressor is 140℃.

8.1.2 The calculation of additional cooling power

When additional cooling is required, the calculation method of additional cooling power is as follows:

Additional cooling power required (Poc): Poc=m×(h－h125℃)　[kW]　(formula 8-1)

In the formula: m is the mass flow rate in the evaporator (kg/s); h is the discharge enthalpy without additional cooling (kJ/kg); h125℃ is the enthalpy of the corresponding discharge pressure (kJ/kg);

It's recommended to consider the worst working condition (Min. Te, Max. Tc and Max. Superheat) during cooling power calculation. The ReComp selection software can also calculate automatically.

8.1.3 Additional cooling fan

If the power supply voltage of additional cooling and compressor are same, connect the fan terminal directly to the compressor motor terminal, or the separated power supply.

8.2 Capacity regulation

Many situations of refrigeration area require capacity regulation. Regulate the compressor capacity according to the actual requirement to avoid frequent start-up, frequent start-ups not only damage the compressor motor and mechanical part, but also not energy efficiency.

Refcomp SPC series compressor is available of the built-in capacity regulation device. A cylinder head with bypass suction can regulate the refrigeration capacity. The capacity regulation cylinder head has an internal on-off device to regulate compressor suction, this device is controlled by the external solenoid valve, so the compressor capacity can be linear regulated by the bypass number of compressor cylinders.

8.2.1 Capacity regulation cylinder head

The special cylinder head components of capacity regulation is CR cylinder head. CR cylinder head (see Figure 8-1) is equipped with control solenoid valve 1. When the load is 100%, the solenoid valve 1 is not powered on. The control solenoid valve core 2 separates the discharge passage from the suction passage. The spring 5 supports the on-off device by the spring force to connect the refrigerant steam to the suction port of the compressor. Under part load, solenoid valve 1 is powered on. The control solenoid valve core 2 connects the discharge passage and the suction passage. The pressure acting on the on-off cylinder 6 overcomes the spring force of the spring 5. The on-off cylinder 6 will prevent the refrigerant vapor at the suction end from entering the suction port of the compression cylinder, and bypass the discharge to the suction port.

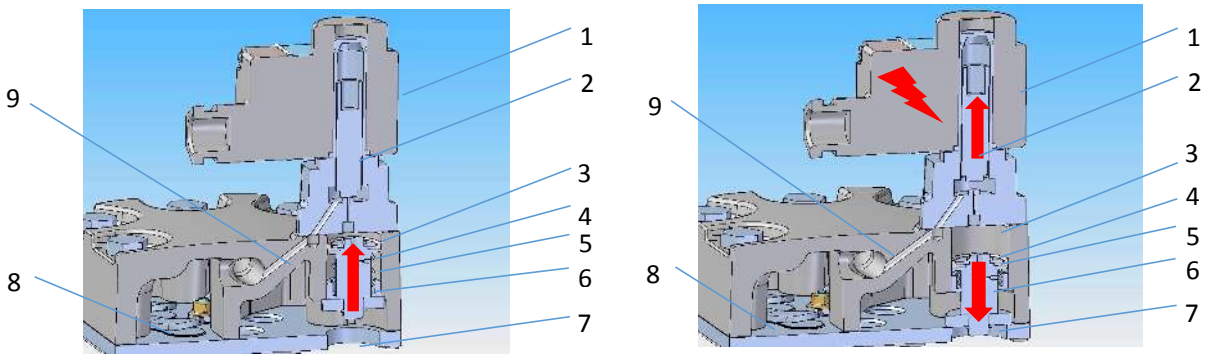

(A) Control solenoid valve power off **(B) Control solenoid valve power on**

Figure 8-1 Schematic diagram of control solenoid valve working

Note:

1) **Control solenoid valve coil** **2) Control solenoid valve core** **3) Bypass on-off chamber** **4) Discharge passage** **5) On-off spring** **6)On-off cylinder** **7) Steam suction port** **8) Steam discharge port** **9) Connection of bypass on-off chamber and discharge outlet**

The reduction of compressor power consumption is disproportionate to the reduction of capacity control cooling capacity: the decay factor of compressor power consumption is related to the evaporating temperature and the number of steps of capacity control. See Table 8-2 for specific relationships.

For example: when two compression cylinders of the four cylinder compressor work, the capacity regulation is 50%,

but the power consumption is 53%.

Table 8-2 Compressor power consumption factor

Compressor model	No. of CR cylinder head	Capacity regulation	Compressor power consumption factor
4-cylinder	0	100%	1
	1	50%	0.53

8.2.2 Capacity regulation cylinder head position

Figure 8-2 shows the position of CR capacity regulation head.

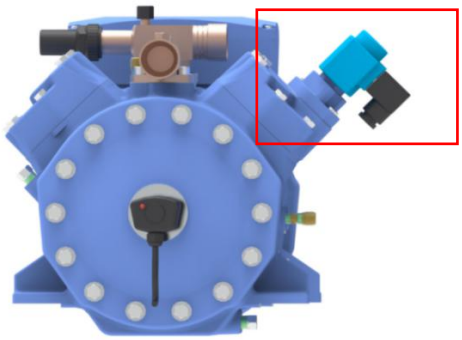

Figure 8-2 Schematic diagram of SPC series CR capacity cylinder head

8.2.3 Working range under part load

Compressor discharge temperature will increase under partial load because the compressor suction decrease, the suction cooling motor increase the steam superheat, the total efficiency of compressor decreases.Therefore, under part load, pay attention to the application limits shown in the *Application range* at part load in Chapter 2 of the *SPC Series Semi-hermetic Piston Compressor Technical Manual*.

8.2.4 Additional cooling under part load

Different compressors are equipped with different additional cooling devices, please check chapter 8.1 *Additional cooling* for details.

8.2.5 Cautions under part load

In the refrigeration system design, generally, at the gas return side, the flow rate of vertical pipeline shall not lower than 7m/s, horizontal pipeline shall not lower than 4m/s, the oil return might be influenced of compressor suction side if lower than these speeds. Generally, two gas return pipelines are required at the gas return pipeline design of part load refrigeration system, the refrigerant steam go through the small size pipeline during part load and go through big size pipeline during full load. Oil separator is required for the refrigeration system if the pipeline is too long. The expansion valve selection of evaporator should also consider the working condition under part load.

8.2.6 Start under part load

The general operating conditions of the control solenoid valve for CR capacity regulation are based on the temperature, pressure, humidity, etc. of the refrigeration system, but avoid frequent start-up for the regulation variation.