Peter Wong
Managing Director & Shareholder
Hangzhou DM Group
Hangzhou DM power transmission Co.,LTD
Hangzhou DM Compressor Co.,LTD
peter@dumax-group.com
http://dumax-group.com/

Sam Chan
Sales Director & Shareholder
Hangzhou DM Group
Hangzhou DM power transmission Co.,LTD
Hangzhou DM Compressor Co.,LTD
sam@dumax-group.com
http://dumax-group.com/



Reciprocating Compressor

Copyright © 2021 Hangzhou Dumax (DM) Group All Rights Reserved

目录 CONTENTS

01 型号说明 Model Designation

02 应用范围 Envelope

04 性能参数 Performances
R134a
R22
R404A/R507A

13 技术数据 Technical data

15 压缩机展示图 Compressor exhibition



MODEL DESIGNATION
型号说明

Semi-hermetic Reciprocating Compressor

半封闭活塞式制冷压缩机

3-50 HP , 18-150 m^3/h

COMPRESSOR / 压缩机	RFC	4	D	-	5	.2

NUMBER OF CYLINDERS / 缸数	
4	4 Cylinders/ 4缸机
6	6 Cylinders/ 6缸机

TYPE / 类型	
G	High temp / 高温机
D	Low temp / 低温机
DS	Double Stage / 双级机

NOMINAL MOTOR POWER / 电机名义功率	
5	Hp / 马力

VERSION / 版本	
2	2 / 第2版

APPLICATION LIMITS
Suction gas temperature 20℃

应用范围

基于吸气温度20℃

R404A•R507A

RFC4D-3.2—RFC4G-9.2

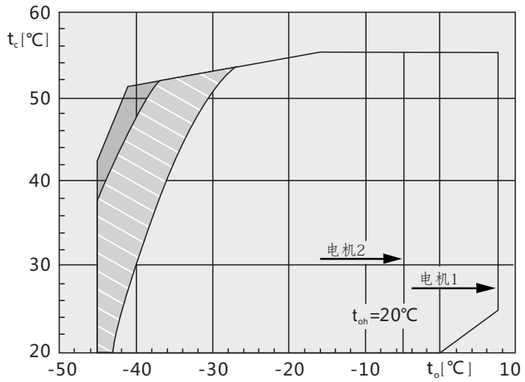

R404A•R507A

RFC4D-8.2—RFC6G-50.2

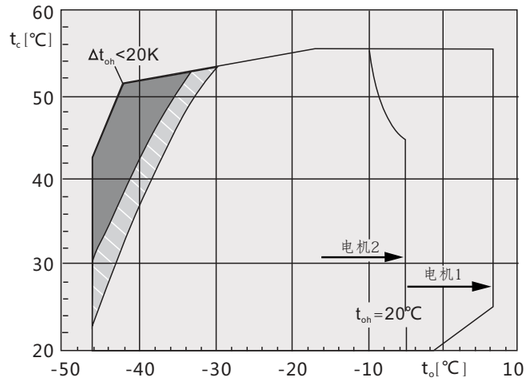

R134a

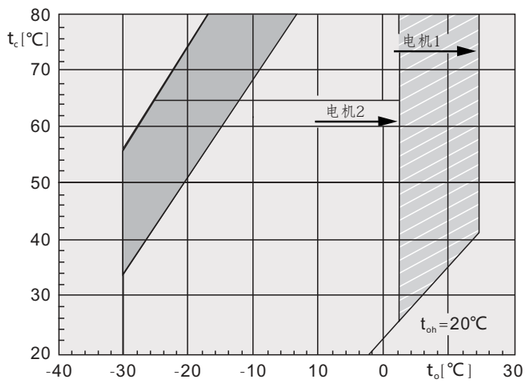

R407C

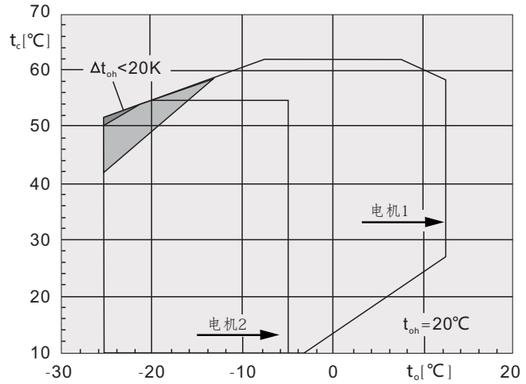

t_o	Evaporating temperature(°C)	t_o	蒸发温度(°C)
t_{oh}	Suction gas temperature(°C)	t_{oh}	吸气温度(°C)
Δt_{oh}	Suction superheat(K)	Δt_{oh}	吸气过热度(K)
t_c	Condensing temperature(°C)	t_c	冷凝温度(°C)

Additional cooling or max. 0℃ suction gas temperature	附加冷却或最高0℃吸气温度
Additional cooling	附加冷却
Additional cooling&limited suction gas temperature	附加冷却+限制最高吸气温度
Suction superheat>10K	吸气过热度>10K

APPLICATION LIMITS
Suction gas temperature 20℃

应用范围

基于吸气温度20℃

R22

RFC4D-3.2—RFC4D-5.2

空气冷却-直接吸气冷却

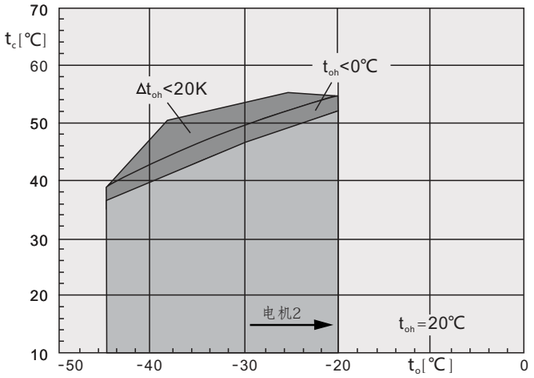

R22

RFC4D-3.2—RFC4G-9.2

吸气冷却

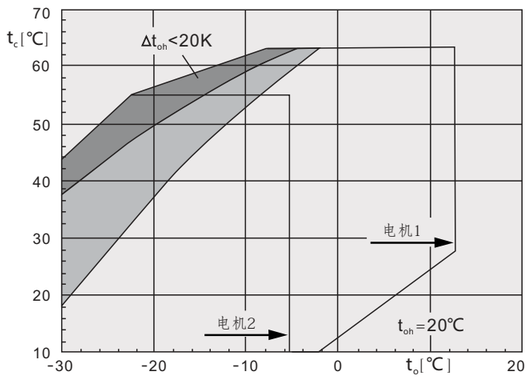

R22

RFC4D-8.2—RFC6D-40.2

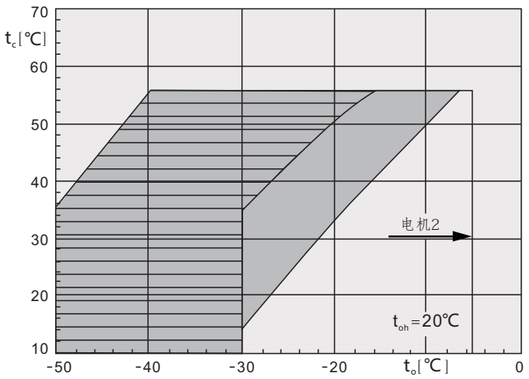

R22

RFC4D-8.2—RFC6G-50.2

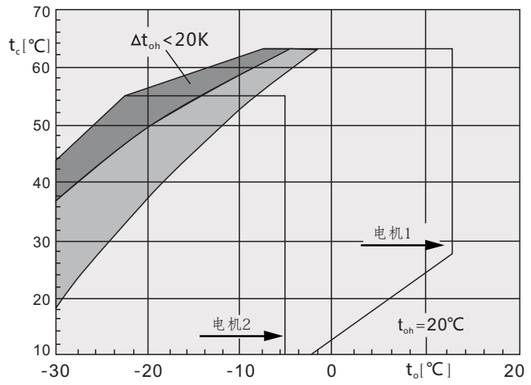

t_o	Evaporating temperature(℃)	t_o 蒸发温度(℃)
t_{oh}	Suction gas temperature(℃)	t_{oh} 吸气温度(℃)
Δt_{oh}	Suction superheat(K)	Δt_{oh} 吸气过热度(K)
t_c	Condensing temperature(℃)	t_c 冷凝温度(℃)

Additional cooling — 附加冷却

Additional cooling&limited suction gas temperature — 附加冷却+限制最高吸气温度

Additional cooling&liquid injection cooling system — 附加冷却+喷液冷却系统

半封闭活塞式制冷压缩机
SEMI-HERMETIC RECIPROCATING COMPRESSOR

PERFORMANCES
性能参数 R134a

型号 Model	冷凝温度 Condensing Temperature ℃	制冷量 Refrigerating Capacity Qo(W) 功率消耗 Power Consumption Pe(kW) 蒸发温度 Evaporating Temperature(℃) ↓	12.5	10	7.5	5	0	-5	-10	-15	-20	-25	-30	-35	-40	-45	-50
RFC4D-3.2	30	Qo	15960	14520	13190	11960	9760	7870	6260	4900	3740	2780	1970				
		Pe	2.23	2.21	2.19	2.15	2.07	1.95	1.81	1.65	1.47	1.26	1.04				
	40	Qo	14070	12790	11610	10510	8540	6860	5420	4190	3160	2290	1570				
		Pe	2.64	2.60	2.55	2.49	2.36	2.20	2.02	1.81	1.58	1.33	1.05				
	50	Qo	12250	11130	10090	9120	7390	5900	4630	3540	2630	1860	1220				
		Pe	3.04	2.96	2.88	2.80	2.61	2.41	2.19	1.94	1.66	1.36	1.02				
RFC4G-5.2	50	Qo	12200	11090	10060	9090	7370	5890	4620	3540	2630						
		Pe	3.19	3.11	3.02	2.93	2.72	2.49	2.24	1.97	1.67						
	60	Qo	10490	9530	8630	7800	6300	5010	3900	2960	2160						
		Pe	3.59	3.49	3.37	3.25	3.00	2.72	2.42	2.09	1.74						
	70	Qo	8800	7990	7230	6530	5260	4160	3210	2410	1720						
		Pe	3.99	3.85	3.71	3.57	3.27	2.94	2.58	2.20	1.79						
RFC4D-4.2	30	Qo	20700	18850	17120	15510	12660	10220	8160	6410	4960	3750	2760				
		Pe	2.80	2.84	2.86	2.86	2.82	2.72	2.57	2.38	2.16	1.91	1.64				
	40	Qo	18210	16550	15020	13600	11060	8900	7050	5490	4190	3100	2200				
		Pe	3.48	3.47	3.44	3.39	3.25	3.06	2.83	2.55	2.25	1.92	1.58				
	50	Qo	15740	14300	12960	11720	9500	7600	5970	4590	3420	2450	1640				
		Pe	4.13	4.06	3.98	3.88	3.64	3.36	3.03	2.67	2.27	1.86	1.42				
RFC4G-6.2	50	Qo	15710	14270	12940	11710	9490	7600	5970	4590	3430						
		Pe	4.16	4.09	4.00	3.89	3.65	3.35	3.02	2.65	2.24						
	60	Qo	13350	12120	10970	9900	7990	6340	4920	3710	2690						
		Pe	4.81	4.68	4.53	4.37	4.01	3.61	3.17	2.70	2.21						
	70	Qo	11030	10000	9030	8140	6520	5110	3910	2870	1990						
		Pe	5.44	5.24	5.03	4.81	4.34	3.83	3.28	2.71	2.11						
RFC4D-5.2	30	Qo	24600	22450	20400	18510	15140	12250	9790	7700	5930	4440	3210				
		Pe	3.61	3.55	3.49	3.42	3.26	3.08	2.86	2.62	2.35	2.05	1.72				
	40	Qo	21700	19750	17940	16270	13260	10690	8480	6610	5030	3700	2600				
		Pe	4.30	4.21	4.12	4.02	3.79	3.53	3.23	2.91	2.56	2.17	1.75				
	50	Qo	18880	17170	15580	14110	11460	9190	7240	5590	4190	3020	2050				
		Pe	4.96	4.84	4.71	4.57	4.27	3.93	3.56	3.15	2.71	2.23	1.73				
RFC4G-7.2	50	Qo	18800	17100	15520	14050	11430	9170	7230	5580	4190						
		Pe	4.99	4.86	4.73	4.58	4.27	3.92	3.54	3.13	2.69						
	60	Qo	16160	14680	13310	12030	9750	7770	6090	4650	3440						
		Pe	5.62	5.46	5.28	5.10	4.70	4.28	3.82	3.33	2.80						
	70	Qo	13580	12330	11170	10080	8140	6460	5020	3800	2770						
		Pe	6.27	6.06	5.84	5.61	5.13	4.63	4.09	3.51	2.90						
RFC4D-6.2	30	Qo	29550	26900	24450	22200	18170	14720	11770	9270	7170	5410	3950				
		Pe	4.35	4.28	4.20	4.10	3.89	3.64	3.35	3.04	2.70	2.33	1.95				
	40	Qo	26000	23650	21500	19490	15910	12830	10210	7980	6100	4520	3210				
		Pe	5.25	5.13	5.00	4.85	4.54	4.18	3.80	3.38	2.94	2.48	2.00				
	50	Qo	22550	20500	18630	16880	13740	11040	8730	6760	5100	3700	2540				
		Pe	6.08	5.90	5.72	5.53	5.11	4.66	4.17	3.66	3.13	2.57	1.99				
RFC4G-9.2	50	Qo	22550	20550	18640	16890	13750	11040	8730	6770	5100						
		Pe	6.07	5.90	5.72	5.53	5.12	4.66	4.18	3.66	3.12						
	60	Qo	19250	17500	15870	14360	11650	9320	7320	5620	4180						
		Pe	6.86	6.63	6.39	6.14	5.62	5.07	4.49	3.89	3.25						
	70	Qo	15970	14520	13160	11900	9620	7660	5980	4560	3350						
		Pe	7.57	7.29	6.99	6.69	6.07	5.43	4.76	4.06	3.34						

参数基于吸气温度20℃，50Hz，液体无过冷。Suction gas temperature 20℃, 50Hz, without liquid subcooling.

附加冷却或限制吸气温度。Additional cooling or limited suction gas temperature.

PERFORMANCES
性能参数 R134a

型号 Model	冷凝温度 Condensing Temperature ℃	制冷量 Refrigerating Capacity Qo(W) 功率消耗 Power Consumption Pe(kW)															
		蒸发温度 Evaporating Temperature(℃)															
			12.5	10	7.5	5	0	-5	-10	-15	-20	-25	-30	-35	-40	-45	-50
RFC4D-8.2	30	Qo	38400	35000	31800	28900	23600	19120	15280	12030	9280	6980	5080				
		Pe	5.05	5.12	5.16	5.16	5.05	4.83	4.53	4.15	3.73	3.28	2.84				
	40	Qo	33950	30900	28050	25400	20700	16670	13220	10290	7810	5730	3990				
		Pe	6.63	6.52	6.39	6.24	5.87	5.43	4.93	4.40	3.83	3.26	2.69				
	50	Qo	29350	26700	24200	21900	17730	14170	11110	8520	6320	4470	2930				
		Pe	7.88	7.64	7.38	7.10	6.52	5.89	5.23	4.54	3.84	3.14	2.44				
RFC4G-12.2	50	Qo	29100	26400	23900	21550	17390	13810	10750	8140	5940						
		Pe	7.51	7.33	7.12	6.88	6.34	5.73	5.06	4.37	3.66						
	60	Qo	24450	22150	19990	18000	14420	11340	8710	6460	4560						
		Pe	8.49	8.18	7.86	7.51	6.79	6.02	5.21	4.40	3.58						
	70	Qo	19850	17950	16170	14520	11540	8970	6760	4880	3290						
		Pe	9.15	8.75	8.33	7.91	7.04	6.14	5.24	4.33	3.43						
RFC4D-10.2	30	Qo	44850	40850	37150	33700	27550	22300	17790	13960	10730	8020	5760				
		Pe	5.88	6.01	6.08	6.10	5.99	5.73	5.33	4.84	4.30	3.73	3.17				
	40	Qo	39600	36000	32700	29650	24150	19410	15360	11920	9000	6540	4480				
		Pe	7.63	7.56	7.45	7.29	6.89	6.38	5.77	5.11	4.41	3.70	3.01				
	50	Qo	34200	31100	28200	25450	20600	16450	12870	9820	7230	5050	3220				
		Pe	9.11	8.85	8.56	8.26	7.58	6.84	6.05	5.24	4.40	3.58	2.77				
RFC4G-15.2	50	Qo	34700	31450	28450	25650	20650	16350	12680	9560	6930						
		Pe	8.78	8.54	8.28	8.00	7.36	6.65	5.88	5.07	4.24						
	60	Qo	29250	26500	23900	21500	17170	13450	10270	7550	5260						
		Pe	9.80	9.44	9.06	8.67	7.83	6.94	6.01	5.05	4.07						
	70	Qo	23850	21550	19380	17380	13770	10650	7960	5670	3720						
		Pe	10.58	10.12	9.64	9.15	8.14	7.09	6.00	4.89	3.76						
RFC4D-12.2	30	Qo	50900	46300	42100	38250	31300	25350	20250	15930	12290	9240	6700				
		Pe	7.45	7.40	7.33	7.22	6.93	6.55	6.10	5.58	5.01	4.41	3.79				
	40	Qo	45300	41200	37450	33950	27700	22300	17680	13760	10440	7650	5320				
		Pe	9.16	8.97	8.75	8.50	7.95	7.33	6.65	5.92	5.17	4.39	3.61				
	50	Qo	39550	35950	32600	29500	23900	19090	14980	11480	8510	6020	3930				
		Pe	10.79	10.45	10.09	9.71	8.88	7.99	7.05	6.10	5.15	4.22	3.34				
RFC4G-20.2	50	Qo	40250	36500	33000	29800	23950	18970	14690	11040	7940						
		Pe	10.42	10.11	9.77	9.41	8.63	7.77	6.85	5.88	4.89						
	60	Qo	33900	30650	27650	24850	19850	15530	11830	8690	6020						
		Pe	11.65	11.20	10.72	10.22	9.18	8.10	6.98	5.84	4.70						
	70	Qo	27500	24850	22350	20000	15840	12240	9150	6520	4300						
		Pe	12.59	12.01	11.42	10.82	9.57	8.30	7.02	5.75	4.52						
RFC4D-15.2	30	Qo	69100	62800	57000	51600	49150	33700	26700	20850	15920	11840	8500				
		Pe	10.40	10.07	9.74	9.41	8.74	8.07	7.38	6.67	5.95	5.20	4.42				
	40	Qo	61300	55700	50400	45600	37000	29600	23350	18100	13700	10060	7080				
		Pe	12.46	11.93	11.43	10.93	9.97	9.04	8.13	7.23	6.32	5.39	4.44				
	50	Qo	54100	49050	44400	40100	32400	25800	20250	15570	11660	8430	5800				
		Pe	14.24	13.54	12.87	12.22	10.99	9.81	8.69	7.59	6.51	5.43	4.34				
RFC4G-25.2	50	Qo	54100	49050	44400	40100	32400	25800	20250	15570	11660						
		Pe	13.77	13.13	12.52	11.92	10.78	9.68	8.62	7.58	6.55						
	60	Qo	47100	42700	38600	34800	28000	22200	17320	13190	9760						
		Pe	15.04	14.27	13.53	12.81	11.44	10.13	8.89	7.69	6.53						
	70	Qo	40250	36450	32900	29600	23750	18740	14500	10940	7980						
		Pe	16.09	15.21	14.36	13.53	11.96	10.48	9.07	7.74	6.45						

参数基于吸气温度20℃，50Hz，液体无过冷。Suction gas temperature 20℃, 50Hz, without liquid subcooling.
附加冷却或限制吸气温度。Additional cooling or limited suction gas temperature.

半封闭活塞式制冷压缩机
SEMI-HERMETIC RECIPROCATING COMPRESSOR

PERFORMANCES
性能参数 R134a

型号 Model	冷凝温度 Condensing Temperature ℃	制冷量 Refrigerating Capacity Qo(W) 功率消耗 Power Consumption Pe(kW)															
		蒸发温度 Evaporating Temperature(℃)															
			12.5	10	7.5	5	0	-5	-10	-15	-20	-25	-30	-35	-40	-45	-50
RFC4D-20.2	30	Qo	78500	71400	64800	58600	47700	38350	30450	23800	18190	13560	9770				
		Pe	12.45	12.15	11.83	11.50	10.78	10.00	9.16	8.26	7.31	6.32	5.28				
	40	Qo	69700	63300	57400	51900	42100	33750	26650	20700	15700	11570	8190				
		Pe	14.65	14.14	13.62	13.09	12.03	10.95	9.85	8.73	7.59	6.44	5.28				
	50	Qo	61500	55800	50500	45650	36950	29500	23200	17870	13430	9760	6770				
		Pe	16.67	15.93	15.20	14.48	13.06	11.67	10.31	8.97	7.66	6.37	5.10				
RFC4G-30.2	50	Qo	61500	55800	50500	45650	36950	29500	23200	17870	13430						
		Pe	16.09	15.42	14.76	14.10	12.79	11.50	10.22	8.94	7.67						
	60	Qo	53700	48650	44000	39700	32000	25450	19890	15210	11300						
		Pe	17.65	16.80	15.96	15.14	13.54	11.99	10.49	9.03	7.60						
	70	Qo	45900	41600	37600	33850	27200	21550	16720	12680	9320						
		Pe	19.22	18.16	17.14	16.15	14.25	12.46	10.75	9.12	7.55						
RFC6D-25.2	30	Qo	103800	94300	85600	77400	63000	50600	40100	31300	23900	17780	12760				
		Pe	15.62	15.12	14.62	14.12	13.12	12.11	11.08	10.02	8.93	7.81	6.64				
	40	Qo	92000	83600	75700	68500	55500	44450	35100	27150	20550	15100	10630				
		Pe	18.70	17.92	17.15	16.41	14.97	13.57	12.20	10.85	9.49	8.10	6.66				
	50	Qo	81100	73600	66600	60200	48600	38800	30400	23400	17510	12660	8710				
		Pe	21.40	20.30	19.33	18.35	16.49	14.73	13.04	11.40	9.78	8.16	6.51				
RFC6G-35.2	50	Qo	81100	73600	66600	60200	48600	38800	30400	23400	17510						
		Pe	20.70	19.72	18.80	17.90	16.18	14.53	12.94	11.38	9.84						
	60	Qo	70700	64100	57900	52200	42050	33400	26000	19810	14650						
		Pe	22.60	21.40	20.30	19.24	17.17	15.21	13.34	11.54	9.80						
	70	Qo	60400	54700	49400	44450	35650	28150	21750	16420	11980						
		Pe	24.20	22.80	21.60	20.30	17.95	15.73	13.62	11.61	9.68						
RFC6D-30.2	30	Qo	117900	107100	97200	88000	71600	57600	45700	35650	27300	20350	14660				
		Pe	18.68	18.23	17.76	17.26	16.18	15.01	13.74	12.40	10.97	9.48	7.93				
	40	Qo	104600	95000	86100	77900	63200	50700	40000	31050	23550	17360	12280				
		Pe	22.00	21.20	20.40	19.65	18.05	16.43	14.77	13.10	11.39	9.67	7.92				
	50	Qo	92300	83800	75800	68500	55400	44250	34800	26800	20150	14650	10160				
		Pe	25.00	23.90	22.80	21.70	19.60	17.51	15.47	13.46	11.49	9.55	7.65				
RFC6G-40.2	50	Qo	92300	83800	75800	68500	55400	44250	34800	26800	20150						
		Pe	24.10	23.10	22.10	21.20	19.20	17.26	15.33	13.42	11.51						
	60	Qo	80500	73000	66000	59600	48050	38200	29850	22800	16960						
		Pe	26.50	25.20	24.00	22.70	20.30	17.99	15.74	13.55	11.41						
	70	Qo	68900	62400	56400	50800	40850	32300	25100	19020	13980						
		Pe	28.80	27.30	25.70	24.20	21.40	18.70	16.13	13.69	11.33						
RFC6D-40.2	30	Qo	138400	125800	114200	103400	84200	67900	53900	42200	32400	24250	17570				
		Pe	22.20	21.60	21.10	20.50	19.27	17.91	16.44	14.87	13.20	11.44	9.59				
	40	Qo	122900	111700	101300	91700	74500	59900	47400	36900	28150	20850	14900				
		Pe	25.80	24.90	24.00	23.10	21.20	19.33	17.39	15.42	13.42	11.41	9.38				
	50	Qo	108700	98700	89500	80900	65600	52500	41450	32100	24250	17800	12520				
		Pe	29.90	28.50	27.10	25.80	23.10	20.60	18.16	15.79	13.48	11.23	9.03				
RFC6G-50.2	50	Qo	108700	98700	89500	80900	65600	52500	41450	32100	24250						
		Pe	29.30	28.00	26.70	25.40	22.90	20.50	18.14	15.85	13.61						
	60	Qo	95000	86300	78100	70600	57100	45550	35750	27500	20650						
		Pe	32.60	30.80	29.10	27.50	24.40	21.40	18.67	16.05	13.55						
	70	Qo	81500	74000	66900	60400	48750	38750	30300	23200	17250						
		Pe	35.20	33.10	31.20	29.30	25.80	22.50	19.39	16.49	13.72						

参数基于吸气温度20℃，50Hz，液体无过冷。Suction gas temperature 20℃, 50Hz, without liquid subcooling.
附加冷却或限制吸气温度。Additional cooling or limited suction gas temperature.

PERFORMANCES
性能参数 R22

型号 Model	冷凝温度 Condensing Temperature ℃	制冷量 Refrigerating Capacity Qo(W) 功率消耗 Power Consumption Pe(kW)														
		蒸发温度 Evaporating Temperature(℃)														
		↓	12.5	10	7.5	5	0	-5	-10	-15	-20	-25	-30	-35	-40	-45	-50
RFC4D-3.2	30	Qo						12760	10380	8310	7070	5540	4260	3190	2300		
		Pe						3.25	3.07	2.86	2.68	2.43	2.17	1.93	1.71		
	40	Qo						11220	9030	7140	6010	4650	3510	2560	1790		
		Pe						3.78	3.48	3.16	2.96	2.62	2.28	1.97	1.70		
	50	Qo						9650	7670	5950	4960	3770	2770	1940			
		Pe						4.22	3.82	3.42	3.25	2.88	2.52	2.13			
RFC4G-5.2	30	Qo	24400	22350	20500	18720	15540	12780	10390	8320	6550	5030	3740				
		Pe	2.84	2.97	3.06	3.13	3.17	3.12	2.99	2.80	2.57	2.32	2.07				
	40	Qo	21800	19960	18250	16650	13750	11230	9040	7150	5530	4130	2950				
		Pe	4.00	4.02	4.02	3.99	3.86	3.66	3.40	3.11	2.80	2.49	2.21				
	50	Qo	19180	17530	15980	14530	11920	9640	7660	5950	4480	3220					
		Pe	5.00	4.93	4.84	4.72	4.45	4.12	3.76	3.39	3.02	2.67					
RFC4D-4.2	30	Qo						15780	12860	10350	8820	6930	5340	4010	2910		
		Pe						3.97	3.78	3.54	3.31	3.07	2.76	2.41	2.09		
	40	Qo						13840	11180	8880	7550	5860	4440	3270	2300		
		Pe						4.60	4.28	3.92	3.66	3.32	2.94	2.55	2.17		
	50	Qo						11860	9450	7360	6160	4690	3450	2420			
		Pe						5.11	4.68	4.24	4.01	3.57	3.04	2.49			
RFC4G-6.2	30	Qo	29950	27500	25200	23050	19160	15800	12880	10360	8200	6350	4780				
		Pe	3.43	3.64	3.79	3.90	3.98	3.91	3.73	3.47	3.17	2.86	2.58				
	40	Qo	26750	24500	22400	20450	16930	13860	11190	8890	6910	5210	3770				
		Pe	4.97	5.03	5.03	5.00	4.83	4.56	4.22	3.84	3.46	3.12	2.84				
	50	Qo	23450	21450	19570	17810	14630	11850	9440	7350	5560	4020					
		Pe	6.31	6.22.	6.09	5.94	5.56	5.12	4.65	4.19	3.77	3.43					
RFC4D-5.2	30	Qo						19140	15600	12540	10300	8110	6260	4690	3380		
		Pe						4.77	4.51	4.21	3.93	3.62	3.27	2.91	2.55		
	40	Qo						16830	13590	10800	8830	6880	5220	3820	2650		
		Pe						5.56	5.14	4.70	4.35	3.92	3.49	3.05	2.62		
	50	Qo						14480	11550	9020	7280	5570	4120	2920			
		Pe						6.23	5.6	5.09	4.67	4.23	3.82	3.39			
RFC4G-7.2	30	Qo	36400	33400	30600	28000	23250	19160	15610	12540	9910	7670	5760				
		Pe	4.21	4.37	4.49	4.57	4.63	4.56	4.40	4.15	3.85	3.51	3.15				
	40	Qo	32500	29750	27200	24850	20550	16830	13600	10800	8400	6340	4590				
		Pe	5.83	5.86	5.86	5.82	5.66	5.40	5.06	4.67	4.24	3.80	3.36				
	50	Qo	28500	26100	23800	21700	17830	14480	11560	9030	6850	4970					
		Pe	7.28	7.19	7.07	6.93	6.57	6.14	5.65	5.13	4.61	4.09					
RFC4D-6.2	30	Qo						22950	18740	15120	12000	9340	7070				
		Pe						5.76	5.48	5.16	4.80	4.39	3.91				
	40	Qo						20250	16410	13090	10230	7780	5700				
		Pe						6.62	6.18	5.72	5.22	4.68	4.09				
	50	Qo						17510	14010	10990	8390	6160					
		Pe						7.50	6.91	6.30	5.67	5.00					
RFC4G-9.2	30	Qo	43300	39750	36450	33350	27800	22950	18750	15120	12000	9330	7060				
		Pe	5.50	5.69	5.82	5.90	5.92	5.78	5.53	5.18	4.77	4.34	3.93				
	40	Qo	38900	35650	32600	29800	24700	20250	16420	13100	10240	7790	5710				
		Pe	7.45	7.42	7.36	7.26	7.00	6.64	6.21	5.72	5.20	4.66	4.13				
	50	Qo	34250	31350	28650	26100	21500	17500	14010	10990	8380	6150					
		Pe	9.27	9.05	8.82	8.57	8.06	7.50	6.92	6.30	5.66	4.99					
RFC4D-8.2	30	Qo						30700	25200	20450	16370	12880	9830	7320	5220		
		Pe						7.30	6.91	6.44	5.89	5.29	4.66	4.01	3.35		
	40	Qo						27100	22150	17840	14150	11000	8200	5920	4010		
		Pe						8.39	7.77	7.11	6.42	5.70	5.06	4.31	3.51		
	50	Qo						23450	19050	15250	11880	9050	6640	4610	2910		
		Pe						9.40	8.586	7.73	6.90	6.09	5.25	4.37	3.43		

参数基于吸气温度20℃，50Hz，液体无过冷。Suction gas temperature 20℃, 50Hz, without liquid subcooling.
VARICOOL系统，附加冷却，改变吸气阀位置。VARICOOL system,additional cooling,position of suction valve changed.
附加冷却或限制吸气温度。Additional cooling or limited suction gas temperature.
附加冷却和喷液冷却系统。Additional cooling &liquid injection cooling system.

半封闭活塞式制冷压缩机
SEMI-HERMETIC RECIPROCATING COMPRESSOR

PERFORMANCES
性能参数 R22

型号 Model	冷凝温度 Condensing Temperature ℃	制冷量 Refrigerating Capacity Qo(W) 功率消耗 Power Consumption Pe(kW)														
		蒸发温度 Evaporating Temperature(℃)														
		↓	12.5	10	7.5	5	0	-5	-10	-15	-20	-25	-30	-35	-40	-45	-50
RFC4G-12.2	30	Qo	57100	52400	48100	44000	36700	30350	24800	20050	15930	12410	9410				
		Pe	6.90	7.04	7.13	7.18	7.17	7.00	6.70	6.28	5.76	5.15	4.46				
	40	Qo	50800	46650	42750	39100	32550	26800	21850	17550	13850	10680	7980				
		Pe	9.07	9.03	8.95	8.84	8.52	8.09	7.56	6.95	6.27	5.55	4.79				
	50	Qo	44400	40700	37250	34050	28200	23150	18770	14980	11730	8950					
		Pe	11.07	10.87	10.64	10.38	9.80	9.13	8.39	7.59	6.74	5.86					
RFC4D-10.2	30	Qo						35650	29250	23700	18940	14860	11330	8390	5920		
		Pe						8.44	8.03	7.49	6.86	6.14	5.46	4.70	3.96		
	40	Qo						31450	25700	20700	16390	12710	9500	6850	4630		
		Pe						9.74	9.03	8.25	7.42	6.56	5.68	4.83	4.02		
	50	Qo						27300	22150	17700	13800	10510	7700	5330	3350		
		Pe						10.92	9.94	8.93	7.95	6.91	5.89	4.93	4.04		
RFC4G-15.2	30	Qo	68400	62800	57600	52700	43800	36150	29500	23750	18810	14590	11000				
		Pe	8.33	8.45	8.52	8.54	8.45	8.20	7.81	7.28	6.65	5.93	5.14				
	40	Qo	60900	55900	51200	46800	38850	31950	26000	20800	16360	12550	9320				
		Pe	10.65	10.57	10.45	10.29	9.88	9.35	8.72	8.00	7.21	6.36	5.49				
	50	Qo	53300	48900	44700	40800	3380	27700	22400	17860	13940	10610					
		Pe	12.86	12.58	12.27	11.94	11.23	10.45	9.60	8.70	7.74	6.73					
RFC4D-12.2	30	Qo						41150	33750	27400	21900	17210	12990	9600	6760		
		Pe						10.01	9.46	8.79	8.02	7.16	6.29	5.41	4.55		
	40	Qo						36650	29950	24150	19170	14910	11040	7960	5400		
		Pe						11.46	10.60	9.66	8.66	7.64	6.66	5.67	4.75		
	50	Qo						32050	26050	20850	16150	12280	8980	6200	3880		
		Pe						12.77	11.63	10.43	9.27	8.09	6.94	5.84	4.81		
RFC4G-20.2	30	Qo	79100	72600	66600	61000	50800	41900	34250	27600	21900	16980	12810				
		Pe	10.60	10.62	10.59	10.53	10.29	9.92	9.41	8.77	8.02	7.15	6.18				
	40	Qo	70600	64800	59300	54200	45000	37000	30100	24100	18920	14500	10750				
		Pe	13.15	13.02	12.85	12.63	12.06	11.34	10.51	9.58	8.59	7.54	6.48				
	50	Qo	61900	56700	51900	47400	39250	32150	26000	20650	16050	12130					
		Pe	15.74	15.40	15.01	14.59	13.65	12.60	11.46	10.26	9.02	7.78					
RFC4D-15.2	30	Qo						52300	42700	34450	27350	21300	16400	12000	8310		
		Pe						12.73	11.93	11.01	9.98	8.82	8.25	7.13	5.98		
	40	Qo						46850	38100	30500	24050	18500	13840	9800	6440		
		Pe						14.91	13.81	12.56	11.19	9.76	8.67	7.30	5.90		
	50	Qo						41700	33700	26800	20900	15800	11500	7920	4970		
		Pe						17.11	15.67	14.13	12.47	10.85	9.21	7.53	5.79		
RFC4G-25.2	30	Qo	99300	91200	83600	76500	63700	52600	42950	34650	27500	21400	16260				
		Pe	13.89	13.74	13.56	13.34	12.84	12.22	11.48	10.63	9.67	8.59	7.41				
	40	Qo	89700	82300	75400	68900	57300	47150	38350	30800	24250	18670	13940				
		Pe	16.75	16.47	16.16	15.82	15.05	14.17	13.18	12.07	10.85	9.52	8.08				
	50	Qo	80500	73800	67600	61700	51100	41950	33950	27050	21100	16030					
		Pe	19.56	19.16	18.74	18.27	17.25	16.10	14.83	13.44	11.94	10.33					
RFC4D-20.2	30	Qo						60000	48950	39500	31400	24500	18940	13920	9670		
		Pe						14.64	13.67	12.63	11.51	10.29	9.65	8.40	7.10		
	40	Qo						53700	43700	35100	27750	21500	16080	11430	7530		
		Pe						17.39	16.04	14.60	13.07	11.42	10.35	8.75	7.14		
	50	Qo						47800	38750	30950	24200	18350	13390	9230	5790		
		Pe						20.10	18.40	16.65	14.89	13.14	11.23	9.19	7.06		
RFC4G-30.2	30	Qo	114200	104800	96000	87800	73100	60400	49300	39800	31650	24700	18840				
		Pe	16.42	16.23	16.01	15.74	15.11	14.33	13.44	12.45	11.36	10.21	9.00				
	40	Qo	103000	94500	86500	79100	65700	54000	44000	35350	27950	21650	16330				
		Pe	19.78	19.46	19.09	18.68	17.74	16.67	15.49	14.20	12.83	11.40	9.92				
	50	Qo	92300	84600	77400	70700	58600	48100	39000	31200	24500	18810					
		Pe	23.40	22.90	22.30	21.70	20.40	19.04	17.57	16.05	14.49	12.91					

参数基于吸气温度20℃，50Hz，液体无过冷。Suction gas temperature 20℃, 50Hz, without liquid subcooling.
VARICOOL系统，附加冷却，改变吸气阀位置。VARICOOL system,additional cooling,position of suction valve changed.
附加冷却或限制吸气温度。Additional cooling or limited suction gas temperature.
附加冷却和喷液冷却系统。Additional cooling &liquid injection cooling system.

PERFORMANCES
性能参数 R22

型号 Model	冷凝温度 Condensing Temperature ℃	制冷量 Refrigerating Capacity Qo(W) 功率消耗 Power Consumption Pe(kW)	蒸发温度 Evaporating Temperature(℃)														
			12.5	10	7.5	5	0	-5	-10	-15	-20	-25	-30	-35	-40	-45	-50
RFC6D-25.2	30	Qo						78500	64100	51700	41050	31950	24600	18010	12460		
		Pe						19.10	17.89	16.51	14.96	13.23	12.34	10.70	8.99		
	40	Qo						70300	57200	45850	36100	27750	20750	14710	9660		
		Pe						22.40	20.70	18.84	16.79	14.63	13.01	10.96	8.86		
	50	Qo						62600	50600	40250	31350	23700	17240	11870	7440		
		Pe						25.60	23.50	21.20	18.68	16.28	13.81	11.27	8.66		
RFC6G-35.2	30	Qo	149100	136900	125500	114800	95600	79000	64500	52000	41300	32200	24400				
		Pe	20.90	20.60	20.40	20.00	19.27	18.34	17.24	15.96	14.52	12.90	11.12				
	40	Qo	134600	123500	113200	10350	86000	70800	57600	46200	36400	28050	20900				
		Pe	25.20	24.70	24.30	23.70	22.60	21.30	19.78	18.12	16.29	14.30	12.14				
	50	Qo	120900	110800	101400	92700	76800	63000	51000	40600	31700	24050					
		Pe	29.40	28.80	28.10	27.40	25.90	24.20	22.30	20.20	17.92	15.50					
RFC6D-30.2	30	Qo						90000	73500	59300	47100	36750	28400	20850	14480		
		Pe						22.00	20.50	18.96	17.27	15.43	14.48	12.59	10.65		
	40	Qo						80600	65600	52700	41600	32200	24100	17130	11280		
		Pe						26.10	24.10	21.90	19.61	17.14	15.50	13.10	10.68		
	50	Qo						71700	58200	46500	36300	27500	20050	13840	8670		
		Pe						30.10	27.60	25.00	22.31	19.71	16.85	13.79	10.58		
RFC6G-40.2	30	Qo	171300	157200	144100	131800	109700	90600	74000	59700	47500	37100	28300				
		Pe	24.60	24.40	24.00	23.60	22.70	21.50	20.20	18.68	17.05	15.32	13.51				
	40	Qo	154600	141800	129800	118600	98500	81100	66000	53000	41900	32450	24500				
		Pe	29.70	29.20	28.60	28.00	26.60	25.00	23.20	21.30	19.26	17.11	14.89				
	50	Qo	138500	127000	116200	106100	88000	72200	58500	46800	36750	28200					
		Pe	35.20	34.40	33.50	32.60	30.70	28.60	26.40	24.10	21.70	19.38					
RFC6D-40.2	30	Qo						106100	86800	70100	55900	43800	34000	25100	17600		
		Pe						27.40	25.50	23.50	21.20	18.92	17.07	14.95	12.96		
	40	Qo						95300	77700	62600	49650	38700	29150	20900	13960		
		Pe						31.90	29.50	27.00	24.30	21.40	18.61	15.80	13.06		
	50	Qo						85100	69200	55600	43600	33250	24450	17060	10890		
		Pe						36.40	33.50	30.40	27.04	23.71	20.21	16.60	12.94		
RFC6G-50.2	30	Qo	201400	184800	169400	155000	129100	106700	87300	70600	56300	44150	33900				
		Pe	31.90	31.40	30.80	30.20	28.70	27.10	25.30	23.30	21.20	18.97	16.66				
	40	Qo	181700	166700	152800	139800	116300	95900	78300	63100	50100	39050	29700				
		Pe	37.60	36.90	36.10	35.20	33.30	31.30	29.00	26.60	24.00	21.30	18.44				
	50	Qo	163200	149700	137100	125300	104100	85700	69700	56000	44250	34250					
		Pe	43.00	42.10	41.10	40.10	37.90	35.50	32.80	29.90	26.80	23.50					
RFC6DS-20.2	30	Qo									35500	29700	24500	19970	15960	12400	9180
		Pe									15.46	14.21	12.95	11.68	10.41	9.15	7.91
	40	Qo									34750	29100	24050	19560	15560	11940	8590
		Pe									17.61	16.12	14.64	13.15	11.67	10.19	8.71
	50	Qo									34050	28500	23600	19210	15220		
		Pe									19.74	18.00	16.29	14.56	12.80		
RFC6DS-25.2	30	Qo									40800	34050	28150	22900	18320	14230	10540
		Pe									17.75	16.31	14.86	13.41	11.95	10.51	9.08
	40	Qo									39900	33400	27600	22450	17860	13700	9860
		Pe									20.21	18.51	16.81	15.10	13.40	11.70	10.00
	50	Qo									39100	32750	27100	22050	17470		
		Pe									22.66	20.67	18.70	16.72	14.70		
RFC6DS-30.2	30	Qo									48800	40750	33700	27400	21900	17030	12610
		Pe									21.23	19.52	17.78	16.04	14.30	12.57	10.86
	40	Qo									47750	39950	33000	26850	21350	16390	11790
		Pe									24.18	22.15	20.11	18.07	16.03	13.99	11.96
	50	Qo									46750	39200	32450	26400	20900		
		Pe									27.12	24.73	22.37	20.01	17.59		

参数基于吸气温度20℃，50Hz，液体无过冷。Suction gas temperature 20℃, 50Hz, without liquid subcooling.
附加冷却或限制吸气温度。Additional cooling or limited suction gas temperature.
附加冷却和喷液冷却系统。Additional cooling &liquid injection cooling system.

半封闭活塞式制冷压缩机
SEMI-HERMETIC RECIPROCATING COMPRESSOR

PERFORMANCES
性能参数 R404A/R507A

型号 Model	冷凝温度 Condensing Temperature ℃	制冷量 Refrigerating Capacity Qo(W) 功率消耗 Power Consumption Pe(kW)	蒸发温度 Evaporating Temperature(℃)																
			7.5	5	0	-5	-10	-15	-20	-25	-30	-35	-40	-45	-50	-55	-60	-65	-70
RFC4D-3.2	30	Qo				13720	11330	9260	7470	5940	4630	3510	2580	1800					
		Pe				3.85	3.66	3.44	3.18	2.90	2.58	2.24	1.88	1.50					
	40	Qo				11560	9520	7740	6200	4880	3750	2790	1980	1310					
		Pe				4.42	4.10	3.76	3.40	3.03	2.63	2.23	1.82	1.40					
	50	Qo				9450	7740	6260	4970	3860	2910	2110	1430						
		Pe				4.91	4.48	4.04	3.59	3.13	2.67	2.22	1.77						
RFC4G-5.2	30	Qo	21550	19790	16590	13810	11400	9320	7520	5970	4650	3530	2580						
		Pe	3.78	3.79	3.76	3.67	3.52	3.32	3.07	2.79	2.48	2.15	1.81						
	40	Qo	18240	16740	14020	11650	9580	7790	6240	4900	3760	2790	1970						
		Pe	4.65	4.60	4.46	4.25	3.99	3.69	3.35	2.98	2.59	2.18	1.76						
	50	Qo	14970	13730	11470	9500	7780	6280	4980	3860	2900	2090	1410						
		Pe	5.44	5.33	5.07	4.75	4.39	3.98	3.55	3.10	2.62	2.14	1.65						
RFC4D-4.2	30	Qo				17330	14290	11660	9400	7450	5800	4390	3210	2220					
		Pe				4.61	4.39	4.12	3.81	3.45	3.06	2.65	2.22	1.78					
	40	Qo				14440	11870	9650	7720	6070	4650	3450	2440	1590					
		Pe				5.28	4.93	4.53	4.10	3.64	3.15	2.65	2.14	1.63					
	50	Qo				11650	9550	7720	6130	4760	3590	2590	1750						
		Pe				5.86	5.39	4.87	4.33	3.77	3.19	2.60	2.02						
RFC4G-6.2	30	Qo	27500	25200	21100	17580	14500	11830	9530	7550	5860	4420	3210						
		Pe	4.73	4.75	4.73	4.62	4.43	4.17	3.85	3.48	3.08	2.65	2.21						
	40	Qo	23150	21250	17780	14750	12120	9840	7860	6160	4700	3470	2420						
		Pe	5.87	5.81	5.62	5.35	5.01	4.61	4.17	3.68	3.17	2.65	2.12						
	50	Qo	18930	17360	14490	11980	9790	7890	6240	4820	3600	2570	1710						
		Pe	6.86	6.72	6.37	5.95	5.47	4.95	4.38	3.79	3.19	2.58	1.97						
RFC4D-5.2	30	Qo				21100	17420	14220	11470	9100	7080	5370	3930	2730					
		Pe				5.52	5.29	4.99	4.62	4.18	3.70	3.19	2.66	2.11					
	40	Qo				17650	14520	11810	9460	7440	5720	4250	3010	1980					
		Pe				6.34	5.95	5.50	4.99	4.43	3.83	3.22	2.60	1.98					
	50	Qo				14300	11730	9490	7550	5880	4440	3220	2190						
		Pe				7.07	6.53	5.93	5.29	4.62	3.92	3.22	2.52						
RFC4G-7.2	30	Qo	32600	29900	25000	20800	17120	13950	11210	8860	6860	5160	3720						
		Pe	5.49	5.52	5.51	5.39	5.18	4.88	4.52	4.10	3.63	3.12	2.59						
	40	Qo	27500	25200	21100	17490	14350	11630	9270	7250	5510	4040	2800						
		Pe	6.81	6.75	6.55	6.26	5.88	5.43	4.91	4.35	3.74	3.11	2.47						
	50	Qo	22500	20600	17210	14230	11620	9350	7380	5690	4240	3010	1980						
		Pe	7.98	7.83	7.46	7.00	6.46	5.86	5.20	4.50	3.78	3.03	2.28						
RFC4D-6.2	30	Qo				24950	20650	16900	13670	10900	8540	6530	4840	3420					
		Pe				6.65	6.36	5.98	5.52	5.01	4.45	3.86	3.25	2.63					
	40	Qo				21100	17420	14200	11420	9030	6980	5240	3770	2540					
		Pe				7.64	7.17	6.63	6.03	5.37	4.67	3.94	3.21	2.47					
	50	Qo				17320	14220	11520	9190	7180	5460	4000	2770						
		Pe				8.61	7.98	7.28	6.51	5.71	4.87	4.01	3.14						
RFC4G-9.2	30	Qo	38800	35600	29900	24900	20600	16880	13660	10890	8530	6530	4840						
		Pe	6.85	6.87	6.82	6.64	6.36	5.98	5.53	5.01	4.45	3.86	3.25						
	40	Qo	32850	30150	25300	21100	17410	14210	11440	9050	7000	5250	3770						
		Pe	8.35	8.27	8.01	7.64	7.18	6.63	6.02	5.36	4.66	3.94	3.21						
	50	Qo	27050	24850	20900	17380	14310	11620	9280	7240	5480	3960	2660						
		Pe	9.80	9.62	9.16	8.61	7.98	7.28	6.52	5.71	4.87	4.01	3.14						
RFC4D-8.2	30	Qo				33050	27250	22200	17890	14170	10990	8300	6040	4150					
		Pe				8.74	8.17	7.55	6.87	6.16	5.41	4.64	3.86	3.07					
	40	Qo				27750	22800	18480	14760	11560	8830	6520	4580	2960					
		Pe				9.86	9.05	8.20	7.34	6.46	5.57	4.66	3.74	2.81					
	50	Qo					18350	14790	11710	9070	6800	4880	3260						
		Pe					9.74	8.71	7.68	6.65	5.61	4.55	3.46						

参数基于吸气温度20℃，50Hz，液体无过冷。Suction gas temperature 20℃, 50Hz, without liquid subcooling.
附加冷却或限制吸气温度。Additional cooling or limited suction gas temperature.

PERFORMANCES
性能参数 R404A/R507A

型号 Model	冷凝温度 Condensing Temperature ℃	制冷量 Refrigerating Capacity Qo(W) 功率消耗 Power Consumption Pe(kW)																	
		蒸发温度 Evaporating Temperature(℃)																	
			7.5	5	0	-5	-10	-15	-20	-25	-30	-35	-40	-45	-50	-55	-60	-65	-70
RFC4G-12.2	30	Qo	51500	47200	39450	32750	26900	21900	17550	13830	10650	7960	5700						
		Pe	8.63	8.63	8.49	8.22	7.81	7.29	6.68	6.00	5.26	4.48	3.68						
	40	Qo	43500	39850	33300	27550	22600	18260	14530	11320	8590	6270	4320						
		Pe	10.66	10.47	9.99	9.40	8.72	7.96	7.15	6.29	5.40	4.51	3.62						
	50	Qo	35400	32400	27050	22350	18230	14650	11550	8880	6590	4650	3020						
		Pe	12.28	11.93	11.17	10.33	9.42	8.45	7.45	6.42	5.39	4.36	3.36						
RFC4D-10.2	30	Qo				38300	31600	25750	20700	16390	12690	9550	6910	4690					
		Pe				10.07	9.37	8.64	7.87	7.06	6.22	5.34	4.43	3.48					
	40	Qo				32300	26500	21500	17130	13400	10220	7520	5240	3350					
		Pe				11.39	10.45	9.47	8.45	7.41	6.35	5.30	4.25	3.22					
	50	Qo					21500	17290	13660	10550	7890	5640	3760						
		Pe					11.26	10.04	8.80	7.53	6.28	5.05	3.88						
RFC4G-15.2	30	Qo	61500	56400	47100	39050	32100	26000	20800	16320	12490	9240	6500						
		Pe	10.23	10.19	9.96	9.58	9.06	8.43	7.70	6.90	6.04	5.14	4.23						
	40	Qo	52200	47850	39950	33050	27050	21850	17360	13490	10190	7390	5020						
		Pe	12.41	12.14	11.51	10.79	9.99	9.11	8.18	7.19	6.17	5.13	4.07						
	50	Qo	42600	39000	32500	26750	21800	17430	13680	10460	7710	5380	3420						
		Pe	14.27	13.78	12.78	11.73	10.66	9.55	8.43	7.28	6.11	4.94	3.75						
RFC4D-12.2	30	Qo				44000	36250	29550	23750	18810	14580	11000	7980	5470					
		Pe				11.88	11.15	10.30	9.35	8.35	7.30	6.23	5.19	4.18					
	40	Qo				37300	30600	24800	19810	15510	11840	8740	6120	3950					
		Pe				13.39	12.33	11.18	9.97	8.71	7.44	6.19	4.99	3.87					
	50	Qo					24850	20000	15820	12210	9120	6510	4300						
		Pe					13.28	11.83	10.37	8.91	7.45	6.01	4.60						
RFC4G-20.2	30	Qo	71000	65100	54500	45250	37200	30250	24250	19070	14640	10860	7660						
		Pe	12.24	12.20	11.94	11.47	10.82	10.04	9.14	8.16	7.12	6.07	5.02						
	40	Qo	60500	55400	46250	38200	31250	25200	20000	15530	11730	8510	5820						
		Pe	14.78	14.49	13.79	12.91	11.91	10.80	9.62	8.40	7.16	5.95	4.78						
	50	Qo	49900	45650	37900	31100	25250	20150	15760	12010	8840	6180	3980						
		Pe	16.78	16.28	15.18	13.95	12.63	11.24	9.81	8.38	6.97	5.63	4.37						
RFC4D-15.2	30	Qo				58500	48400	39700	32200	25750	20250	15560	11630	8350					
		Pe				15.78	14.84	13.79	12.63	11.40	10.10	8.77	7.43	6.10					
	40	Qo				49850	41150	33600	27100	21500	16730	12660	9240	6380					
		Pe				18.16	16.80	15.34	13.82	12.25	10.65	9.05	7.47	5.93					
	50	Qo					33950	27600	22050	17330	13270	9820	6920						
		Pe					18.50	16.67	14.80	12.91	11.03	9.17	7.37						
RFC4G-25.2	30	Qo	90700	83200	69700	57900	47750	38950	31350	24800	19210	14460	10460						
		Pe	16.14	16.07	15.72	15.14	14.36	13.41	12.32	11.11	9.81	8.46	7.08						
	40	Qo	77400	71000	59500	49400	40650	33000	26450	20800	15930	11800	8320						
		Pe	19.56	19.22	18.37	17.32	16.11	14.76	13.31	11.78	10.20	8.60	7.00						
	50	Qo	64500	59100	49500	41000	33600	27200	21600	16830	12740	9260	6340						
		Pe	22.78	22.18	20.84	19.33	17.71	15.98	14.18	12.34	10.49	8.65	6.86						
RFC4D-20.2	30	Qo				67100	55500	45400	36750	29350	23000	17600	13060	9260					
		Pe				18.22	17.12	15.89	14.55	13.12	11.62	10.08	8.53	6.97					
	40	Qo				57200	47300	38700	31200	24800	19250	14540	10540	7160					
		Pe				20.94	19.36	17.68	15.93	14.13	12.30	10.47	8.65	6.89					
	50	Qo					38750	31650	25450	20100	15480	11510	8120						
		Pe					21.25	19.15	17.02	14.87	12.73	10.63	8.60						
RFC4G-30.2	30	Qo	103800	95300	79900	66500	54900	44900	36250	28800	22450	17040	12480						
		Pe	19.21	19.07	18.57	17.81	16.84	15.70	14.41	13.02	11.57	10.09	8.61						
	40	Qo	89100	81800	68600	57000	47000	38250	30700	24200	18610	13860	9850						
		Pe	23.37	22.88	21.73	20.38	18.88	17.26	15.56	13.81	12.06	10.33	8.68						
	50	Qo	74300	68200	57100	47400	38900	31500	25100	19580	14840	10810	7410						
		Pe	27.01	26.20	24.46	22.58	20.60	18.56	16.50	14.45	12.45	10.54	8.76						

参数基于吸气温度20℃，50Hz，液体无过冷。Suction gas temperature 20℃, without liquid subcooling.
附加冷却或限制吸气温度。Additional cooling or limited suction gas temperature.

半封闭活塞式制冷压缩机
SEMI-HERMETIC RECIPROCATING COMPRESSOR

PERFORMANCES
性能参数 R404A/R507A

型号 Model	冷凝温度 Condensing Temperature ℃	制冷量 Refrigerating Capacity Qo(W) 功率消耗 Power Consumption Pe(kW)																	
		蒸发温度 Evaporating Temperature(℃)																	
			7.5	5	0	-5	-10	-15	-20	-25	-30	-35	-40	-45	-50	-55	-60	-65	-70
RFC6D-25.2	30	Qo				87900	72500	59300	47800	38000	29700	22650	16740	11850					
		Pe				23.50	22.15	20.58	18.83	16.94	14.95	12.89	10.81	8.75					
	40	Qo				74700	61600	50200	40400	31900	24700	18590	13440	9130					
		Pe				27.20	25.18	23.00	20.68	18.28	15.82	13.36	10.92	8.54					
	50	Qo					50500	41150	33000	25950	19920	14760	10390						
		Pe					27.78	25.02	22.18	19.31	16.43	13.59	10.93						
RFC6G-35.2	30	Qo	136000	124800	104500	86900	71600	58400	47000	37200	28800	21700	15720						
		Pe	25.11	24.84	24.07	23.04	21.77	20.29	28.64	16.83	14.91	12.89	10.81						
	40	Qo	116300	106600	89300	74100	60900	49450	39600	31100	23800	17670	12480						
		Pe	29.81	29.20	27.79	26.14	24.30	22.29	20.14	17.88	15.53	13.13	10.71						
	50	Qo	96600	88600	74100	61400	50400	40700	32400	25250	19160	14000	9670						
		Pe	34.17	33.23	31.19	28.96	26.56	24.04	21.41	18.71	15.96	13.20	10.45						
RFC6D-30.2	30	Qo				98300	81200	66400	53600	42700	33350	25400	18760	13210					
		Pe				26.77	2.507	23.21	21.20	19.08	16.84	14.54	12.17	9.76					
	40	Qo				84000	69300	56600	45550	36050	27900	21000	15130	10210					
		Pe				30.86	28.50	26.00	23.38	20.68	17.90	15.07	12.21	9.34					
	50	Qo					57600	46900	37600	29550	22600	16720	11710						
		Pe					31.43	28.35	25.18	21.94	18.67	15.37	12.06						
RFC6G-40.2	30	Qo	156100	143200	120000	99900	82500	67400	54300	43150	33600	25550	18730						
		Pe	30.46	29.91	28.66	27.20	25.57	23.77	21.82	19.75	17.56	15.28	12.93						
	40	Qo	133400	122400	102700	85400	70300	57300	46000	36300	28000	20900	14940						
		Pe	35.49	34.61	32.70	30.62	28.38	26.02	23.54	20.96	18.30	15.57	12.80						
	50	Qo	110800	101800	85400	70900	58300	47350	37800	29550	22500	16450	11330						
		Pe	40.19	38.97	36.42	33.73	30.91	27.99	24.99	21.92	18.79	15.63	12.46						
RFC6D-40.2	30	Qo				118800	98100	80100	64700	51400	40100	30500	22400	15600					
		Pe				31.46	29.74	27.69	25.37	22.84	20.14	17.34	14.49	11.63					
	40	Qo				100900	83100	67600	54300	42800	32950	24600	17570	11680					
		Pe				36.00	33.43	30.59	27.55	24.36	21.06	17.73	14.40	11.14					
	50	Qo					68300	55300	44050	34300	26050	18990	13060						
		Pe					36.68	33.08	29.33	25.49	21.62	17.76	13.98						
RFC6G-50.2	30	Qo	184400	169300	142200	118600	98100	80400	65200	52100	40900	31400	23450						
		Pe	36.24	35.76	34.49	32.87	30.95	28.79	26.43	23.94	21.38	18.79	16.23						
	40	Qo	157900	145000	121700	101300	83600	68300	55000	43600	33850	25600	18620						
		Pe	43.13	42.10	39.80	37.22	34.43	31.47	28.40	25.28	22.15	19.09	16.14						
	50	Qo	131000	120200	100800	83800	68900	56000	44800	35150	26950	19960	14090						
		Pe	49.80	48.21	44.85	41.30	37.60	33.83	30.02	26.24	22.53	18.97	15.59						
RFC6DS-20.2	30	Qo								31900	27450	23300	19440	15910	12760	10020	7690	5770	4230
		Pe								16.43	15.02	13.64	12.30	11.00	9.76	8.57	7.44	6.40	5.40
	40	Qo								30600	26350	22350	18610	15230	12240	9640	7420	5540	
		Pe								18.53	16.90	15.32	13.79	12.33	10.92	9.57	8.29	7.07	
	50	Qo								29350	25200	21350	17810	14630	11800	9280			
		Pe								20.63	18.79	17.01	15.30	13.65	12.07	10.55			
RFC6DS-25.2	30	Qo								36200	31300	26600	22250	18220	14620	11480	8830	6630	4870
		Pe								18.84	17.27	15.71	14.16	12.65	11.19	9.80	8.49	7.29	6.20
	40	Qo								34900	30100	25500	21300	17420	14000	11040	8500	6350	
		Pe								21.27	19.40	17.60	15.85	14.16	12.55	11.00	9.52	8.13	
	50	Qo								33450	28750	24350	20350	16720	13490	10620			
		Pe								23.71	21.58	19.35	17.56	15.67	13.85	12.10			
RFC6DS-30.2	30	Qo								43400	37400	31750	26500	21700	17420	13690	10540	7920	5800
		Pe								22.53	20.65	18.78	16.94	15.15	13.42	11.77	10.20	8.74	7.40
	40	Qo								41500	35700	30300	25300	20700	16680	13170	10150	7590	
		Pe								25.20	23.10	21.01	18.96	16.95	15.00	13.14	11.37	9.72	
	50	Qo								39500	34000	28850	24100	19870	16060	12650			
		Pe								28.07	25.69	23.33	21.01	18.75	16.57	14.49			

参数基于吸气温度20℃，50Hz，液体无过冷。Suction gas temperature 20℃, 50Hz, without liquid subcooling.
附加冷却或限制吸气温度。Additional cooling or limited suction gas temperature.
附加冷却和喷液冷却系统。Additional cooling &liquid injection cooling system.

TECHNICAL DATA
技术数据

压缩机型号 Compressor Model	电机名义功率 Nominal Motor-Power Hp/kW	排气量 Displacement m^3/h 50/60Hz	缸数x直径x行程 Number Of Cylinder x Diameter x Stoke mm	吸、排气阀接管 Suction, Discharge Line mm		油注入量 Oil Volume L	电源 Power Supply V/Ph/Hz	电气参数 Electrical Parameter		曲轴箱加热器 Crankcase Heater (220v) W	供油方式 Oil Supply Method	重量 Weight kg
				DL Discharge Valve	SL Suction Valve			最大工作电流(A) Max Operating Current	启动、堵转电流(A) Starting/ Locked Current			
RFC4D-3.2	3/2.2	18.1/21.8	4 x Φ41 x 39.3	Φ16	Φ22	2	220-240△ /380-420Y/3/50 265-290△ /440-480Y/3/60	15.9/9.2	76.6/44.2	120		82
RFC4G-5.2	5/3.7	18.1/21.8	4 x Φ41 x 39.3	Φ16	Φ22	2		18.7/10.8	107.7/62.2	120		86
RFC4D-4.2	4/3	22.7/27.4	4 x Φ46 x 39.3	Φ22	Φ28	2		18.5/10.7	92.7/53.2	120		84
RFC4G-6.2	6/4.4	22.7/27.4	4 x Φ46 x 39.3	Φ22	Φ28	2		22.9/13.2	107.7/62.2	120		86
RFC4D-5.2	5/3.7	26.8/32.4	4 x Φ50 x 39.3	Φ22	Φ28	2		23.4/13.5	107.7/62.2	120		85.5
RFC4G-7.2	7/5.1	26.8/32.4	4 x Φ50 x 39.3	Φ22	Φ28	2		27.5/15.9	142.8/82.4	120		88.5
RFC4D-6.2	6/4.4	32.5/39.2	4 x Φ55 x 39.3	Φ22	Φ28	2		27.5/15.9	142.8/82.4	120	离心润滑 Centrifugal lubrication	90.5
RFC4G-9.2	9/6.6	32.5/39.2	4 x Φ55 x 39.3	Φ22	Φ28	2		34.5/20	142.8/82.4	120		90.5
RFC4D-8.2	8/5.5	41.3/49.9	4 x Φ60 x 42	Φ28	Φ35	2.6	380-420YY/3/50 440-480YY/3/60	17	49/81	120		134
RFC4G-12.2	12/8.8	41.3/49.9	4 x Φ60 x 42	Φ28	Φ35	2.6		24	69/113	140		141
RFC4D-10.2	10/7.5	48.5/58.5	4 x Φ65 x 42	Φ28	Φ35	2.6		21	59/99	140		139
RFC4G-15.2	15/10.5	48.5/58.5	4 x Φ65 x 42	Φ28	Φ35	2.6		31	81/132	140		147
RFC4D-12.2	12/8.8	56.2/67.9	4 x Φ70 x 42	Φ28	Φ35	2.6		24	69/113	140		141
RFC4G-20.2	20/15	56.2/67.9	4 x Φ70 x 42	Φ28	Φ42	2.6		37	97/158	140		150
RFC4D-15.2	15/10.5	73.6/88.8	4 x Φ70 x 55	Φ28	Φ42	4		31	81/132	140		183

半封闭活塞式制冷压缩机
SEMI-HERMETIC RECIPROCATING COMPRESSOR

TECHNICAL DATA
技术数据

压缩机型号 Compressor Model	电机名义功率 Nominal Motor-Power Hp/kW	排气量 Displacement m^3/h 50/60Hz	缸数x直径x行程 Number Of Cylinder x Diameter x Stoke mm	吸、排气阀接管 Suction, Discharge Line mm		油注入量 Oil Volume L	电源 Power Supply V/Ph/Hz	电气参数 Electrical Parameter		曲轴箱加热器 Crankcase Heater (220v) W	供油方式 Oil Supply Method	重量 Weight kg
				DL Discharge Valve	SL Suction Valve			最大工作电流(A) Max Operating Current	启动、堵转电流(A) Starting/ Locked Current			
RFC4G-25.2	25/18.5	73.6/88.8	4 x Φ70 x 55	Φ28	Φ54	4.5	380-420YY/3/50 440-480YY/3/60	45	116/193	140	油泵供油 Forced-lubrication	203
RFC4G-20.2	20/15	84.5/101.9	4 x Φ75 x 55	Φ28	Φ54	4.5		37	97/158	140		192
RFC4G-30.2	30/22	84.5/101.9	4 x Φ75 x 55	Φ28	Φ54	4.5		53	135/220	140		206
RFC6D-25.2	25/18.5	110.5/133.4	6 x Φ70 x 55	Φ35	Φ54	4.75		45	116/193	140		224
RFC6G-35.2	35/25.5	110.5/133.4	6 x Φ70 x 55	Φ42	Φ54	4.75		61	147/262	140		235
RFC6D-30.2	30/22	126.8/153.0	6 x Φ75 x 55	Φ35	Φ54	4.75		53	135/220	140		228
RFC6G-40.2	40/30	126.8/153.0	6 x Φ75 x 55	Φ42	Φ54	4.75		78	180/323	140		238
RFC6D-40.2	40/30	151.6/183.0	6 x Φ82 x 55	Φ42	Φ54	4.75		78	180/323	140		239
RFC6G-50.2	50/37	151.6/183.0	6 x Φ82 x 55	Φ42	Φ54	4.75		92	226/404	140		241
RFC6DS-20.2	20/15	73.6/36.9 88.8/44.5	6 x Φ70/70 x 55	Φ35	Φ42	4.75		37	97/158	140		220
RFC6DS-25.2	25/18.5	84.5/42.3 101.9/51.1	6 x Φ75/75 x 55	Φ35	Φ42	4.75		45	116/193	140		233
RFC6DS-30.2	30/22	101.1/50.5 122.0/60.9	6 x Φ82/82 x 55	Φ35	Φ42	4.75		53	135/220	140		234

RFC4D-3.2--RFC4G-9.2 缩机 /RFC4D-3.2--RFC4G-9.2 Compressor

RFC4D-3.2--RFC4G-9.2 玉缩外形图 /Dimensional drawing of RFC4D-3.2--RFC4G-9.2 compressor

RFC4D-8.2--RFC4G-20.2 缩机 / RFC4D-8.2--RFC4G-20.2 Compressor

RFC4D-8.2--RFC4G-20.2 压缩外形图 /Dimensional drawing of RFC4D-8.2--RFC4G-20.2 compressor

缩机

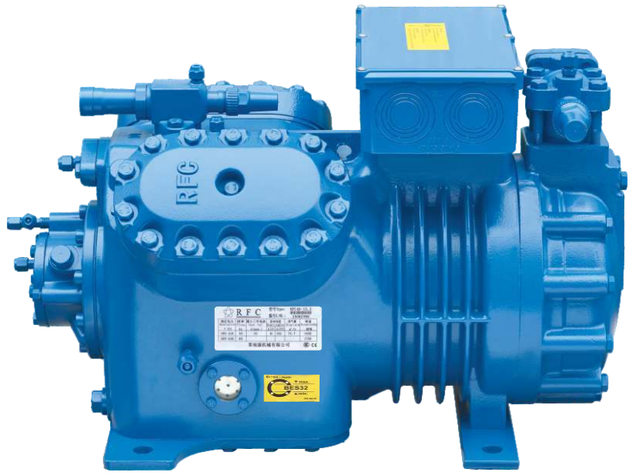

压缩外形图

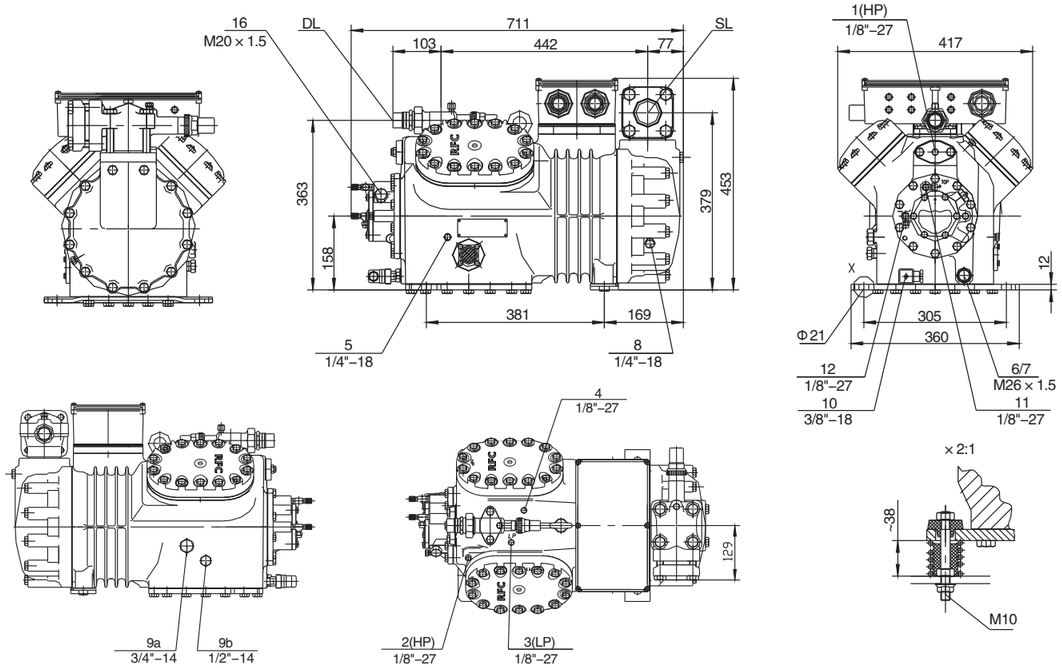

缩机

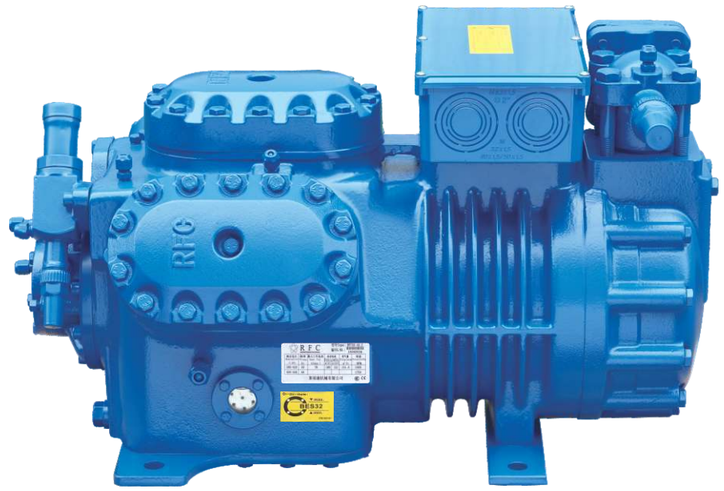

压缩外形图

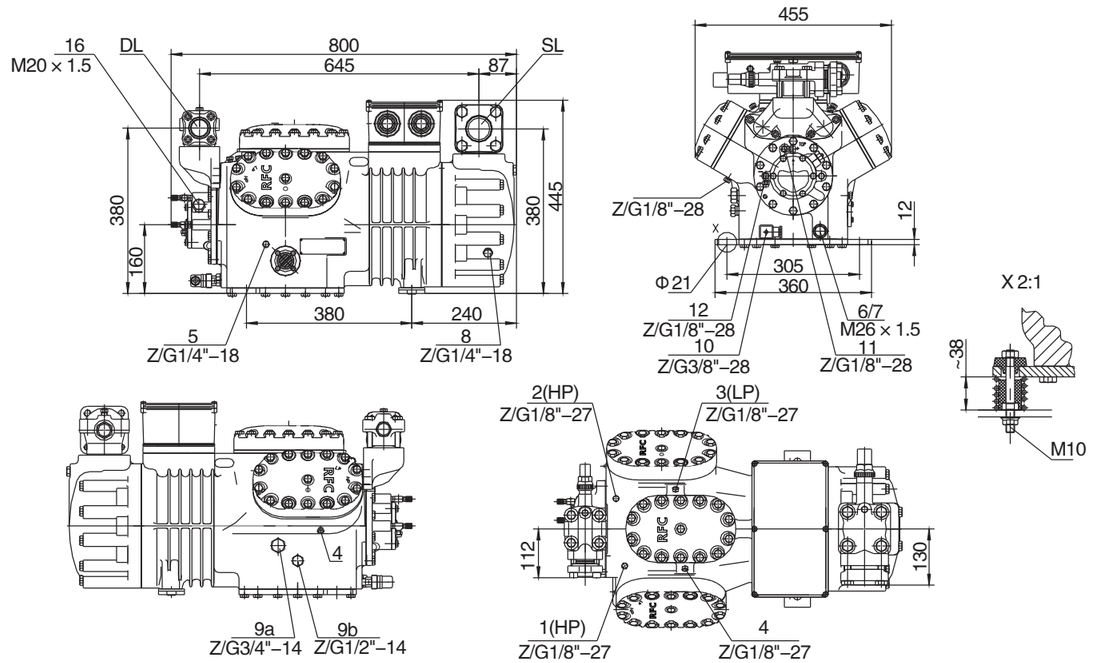

6DS-20.2双级压缩机

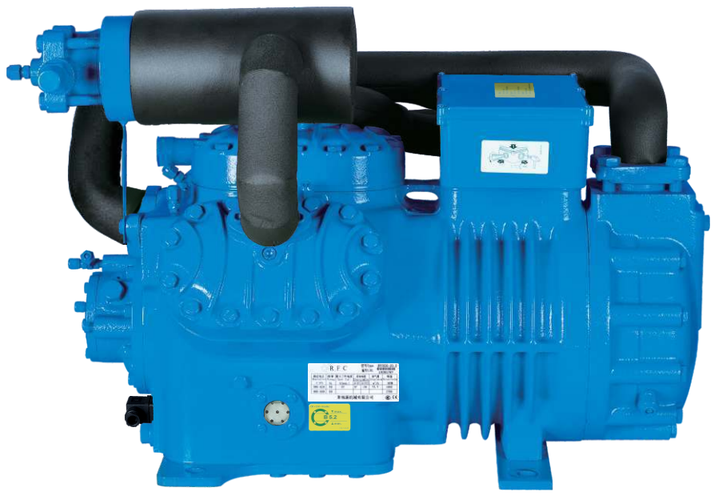

6DS-20.2/6DS-30.2双级压缩机外形图

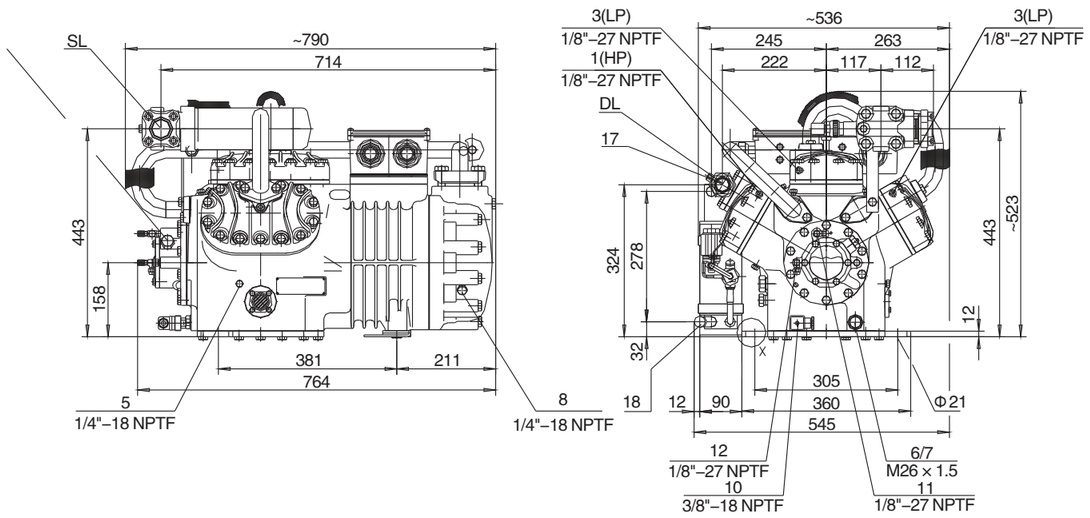

Peter Wong
Managing Director & Shareholder
Hangzhou DM Group
Hangzhou DM power transmission Co.,LTD
Hangzhou DM Compressor Co.,LTD
peter@dumax-group.com
http://dumax-group.com/

Sam Chan
Sales Director & Shareholder
Hangzhou DM Group
Hangzhou DM power transmission Co.,LTD
Hangzhou DM Compressor Co.,LTD
sam@dumax-group.com
http://dumax-group.com/



Reciprocating Compressor

Copyright © 2021 Hangzhou Dumax (DM) Group All Rights Reserved